3600 W, 385 V to 52 V LLC DC-DC CoolGaN™ demo board

using IGT60R070D1 e-Mode CoolGaN™ (600 V, 70 mΩ max)

About this document

Scope and purpose

The CoolGaN™ demo board is a 3600 W full-bridge to full-bridge LLC DC-DC converter which converts 360 V to 400 V DC input voltage to a regulated 52.5 V output. The superior switching characteristics of CoolGaN™ FETs result in very low losses and hence high efficiency power conversion at high switching frequencies along with very high power density.

Intended audience

This document is intended for power supply design engineers and managers.

Table of contents

About this document 1
Table of contents 2
1 Circuit descriptions 4
2 Electrical specifications 7
3 Features 8
4 Electrical drawing, I/O connections 9
5 Necessary equipment 10
6 Start-up and shut-down procedure 11
7 Other safety recommendations 12
7.1 Hook-up points for measuring voltages and currents 12
7.2 Hook up point reference drawings 13
8 Schematics 14
8.1 52 V control board schematic page 1 14
8.2 52 V control board schematic page 2 15
8.3 Control board component reference drawings 16
8.4 CoolGaN™ half-bridge schematic for boards 1 and 2 17
8.5 CoolGaN™ half-bridge boards 1 and 2 component reference drawings 18
8.6 Main power PCB schematic page 1 19
8.7 Main power PCB schematic page 2 20
8.8 Main power component reference drawings 21
8.9 Bias board schematic 22
8.10 Bias board components reference drawings 22
9 Magnetic and heatsink drawings for LLC converter 23
9.1 Main transformer 23
9.2 Bias transformer 27
9.3 Lresonant inductor 30
9.4 Lmag parallel inductor with XFMR primary side 32
9.5 Current transformer 36
9.6 Primary heatsink 39
9.7 Secondary heatsink 40
9.8 Secondary heatsink thermal pad 41
10 Line and load regulation 42
11 Efficiency graphs and thermal data 43
11.1 Efficiency graphs 43
11.2 Thermal measurements 44
11.3 Thermal image results at V_{in} = 385 V at full load 45
11.4 Thermal image results at V_{in} = 360 V at full load 45
11.5 Thermal image results at V_{in} = 400 V at full load 46
12 Waveforms 47
12.1 Switching waveforms at 0 percent load 47
12.2 Switching waveforms at 0 percent load expanded view 48
12.3 Switching waveforms at 10 percent load 49
12.4 Switching waveforms at 10 percent load expanded view 50
12.5 Switching waveforms at 20 percent load 51
12.6 Switching waveforms at 20 percent load expanded view 52

12.7 Switching waveforms at 50 percent load 53
12.8 Switching waveforms at 50 percent load expanded view 54
12.9 Switching waveforms at 100 percent load 55
12.10 Switching waveforms at 100 percent load expanded view 56
12.11 Current limit switching waveforms 57
12.12 Waveforms during output overload shutdown 58
12.13 Output transients from 10 percent to 50 percent load step change 59
12.14 Output transient from 50 percent to 100 percent load step change 60
12.15 Output rise time at V_{in} = 385 V with 52 V at no load 61
12.16 Output fall time at V_{in} = 385 V with 52 V at no load 62
12.17 Output rise time at V_{in} = 360 V DC with 52 V DC at 68 A load 63
12.18 Output rise time at V_{in} = 400 V DC with 52 V DC at 68 A load 64
12.19 Output fall time at V_{in} = 360 V DC with 52 V DC at 68 A load 65
12.20 Output fall time at V_{in} = 400 V DC with 52 V DC at 68 A load 66
12.21 Output PARD at 0 percent load 67
12.22 Output PARD at 50 percent load 68
12.23 Output PARD at 100 percent load 69

13 Bill of Materials (BOM) 70
13.1 Full-bridge main board bill of materials 70
13.2 52 V control board bill of materials 72
13.3 CoolGaN™ half-bridge board 1 bill of materials 74
13.4 CoolGaN™ half-bridge board 2 bill of materials 75
13.5 Bias board bill of materials 76

Revision history 78

1 Circuit descriptions

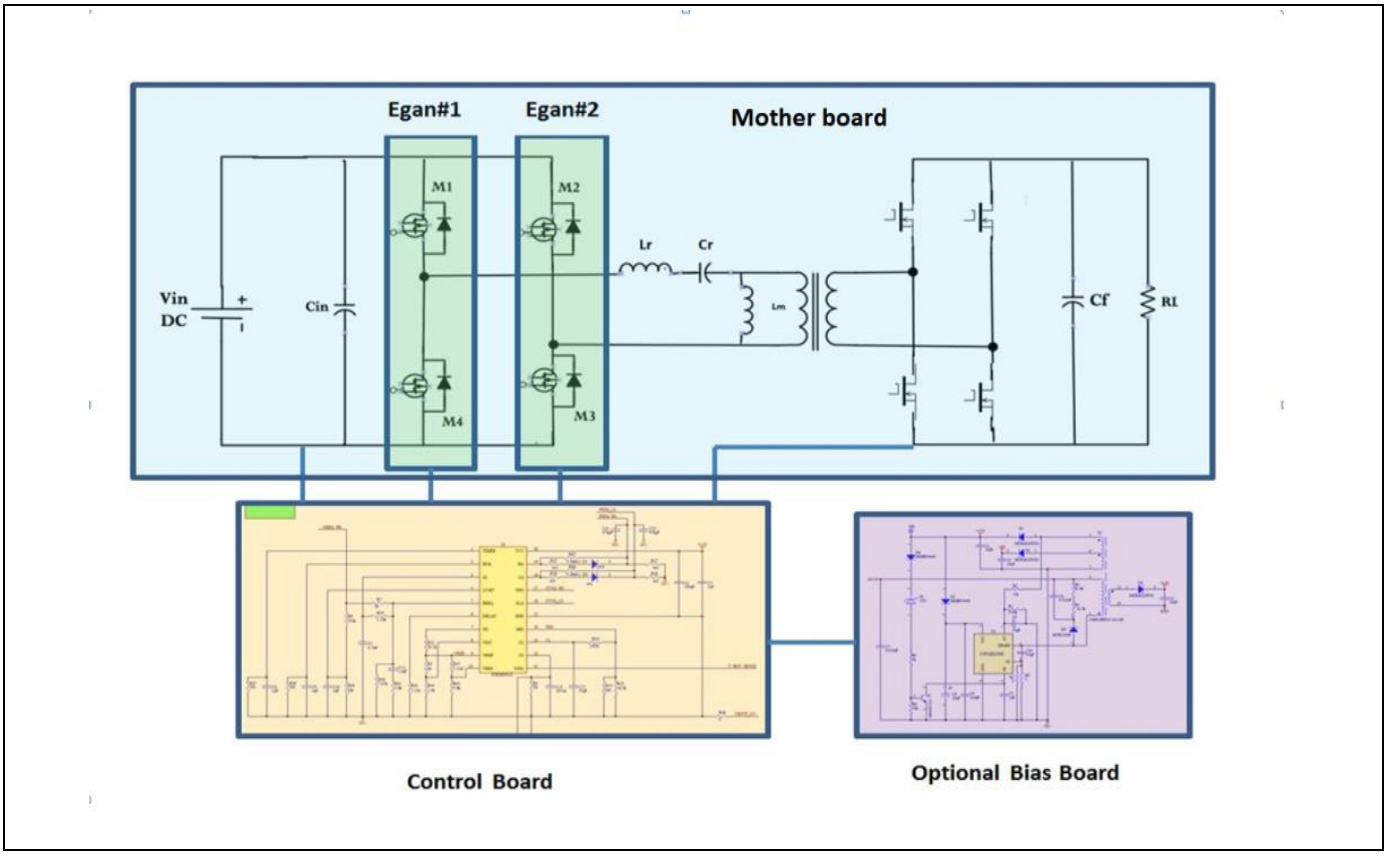

Figure 1 Simplified schematic of CoolGaN™ demo board with different daughter cards highlighted

The demo board is an LLC DC-DC converter which has full-bridge topology for both primary and secondary side, as shown in Figure 1. This has the following advantages:

- Lowest primary current
- Only one winding on the secondary side
- The secondary FETs are clamped to V_{out}, so 80 V MOSFETs with low $R_{DS(on)}$ are used

Figure 2 shows the 3600 W LLC DC-DC. The power transformers use a 0.3 mm gapped core of 3F36 material with litz wire for both primary and secondary windings. The gapped core transformer is used to increase magnetizing current to enable ZVS operation at lighter load. The primary sides of the two transformers are placed in series and the secondary sides of the windings are in parallel (each carrying half of the primary current). The Lr resonant choke is wound on a T106-2 powder core material to minimize core loss. A parallel Lm inductor (core material: PQ26/25-3F36) is also added across the primary-side transformer windings for lowering further effective magnetizing inductance and achieving ZVS operation of the LLC down to no load.

The demo board consists of five different boards:

- Main power board
- 52.6 V control board (daughter board)
- CoolGaN™ half-bridge board 1 (daughter board)
- CoolGaN™ half-bridge board 2 (daughter board)
- Bias board (daughter board)

Main power PCB

As shown in Figure 2, the main PCB includes the secondary-side synchronous FETs (BSC028N06NS) and drivers (UCC27211). The user should note that each synchronous FET in Figure 1 represents four BSC028N06NS FETs in parallel, and each CoolGaN™ FET represents two IGO60R070G1 FETS in parallel. The mother-board has two sets of heatsinks covering the secondary MOSFETs shown in Figure 41.

Attention: ***The heatsinks are electrically connected and any contact should be avoided when a HV (greater than 40 V) input is present.***

The main PCB also contains the power transformers, input/output capacitors, input chokes and mating points for daughter boards.

52 V control board

The 52 V control board uses an Infineon ICE2HS01G resonant mode controller for controlling the primary-side CoolGaN™. The 52 V control board implements resonant frequency control from 180 KHz to over 1 MHz at start-up to regulate the output voltage. The resonant frequency is 350 kHz. A soft-start-up logic is also included on this board.

CoolGaN™ half-bridge boards 1 and 2

The IGT60R070D1 (TOLL package) CoolGaN™s are placed on two half-bridge boards to create the primary side of the full-bridge LLC topology. The CoolGaN™ FETs are driven using an Infineon 1EDI20N12AF isolated CoolGaN™ driver. The heatsinks (0.4" × 0.5" × 0.03") shown in Figure 6 are soldered onto the board to extract heat.

Attention: ***The heatsinks are electrically connected and any contact should be avoided when a HV (greater than 40 V) input is present.***

A Current Sense (CS) transformer is used to sense the primary-side current for feedback on CoolGaN™ board 1.

Bias board (daughter board)

The bias board generates all on-board bias voltages used by the demo unit. No external bias needs to be applied. The bias board consumes around 13.1 W of power under normal operation, which also includes the fan power used to cool the unit down. The bias supply uses the Infineon ICE2QR2280Z off-line SMPS QR PWM controller with integrated 800 V CoolMOS™ and start-up cell.

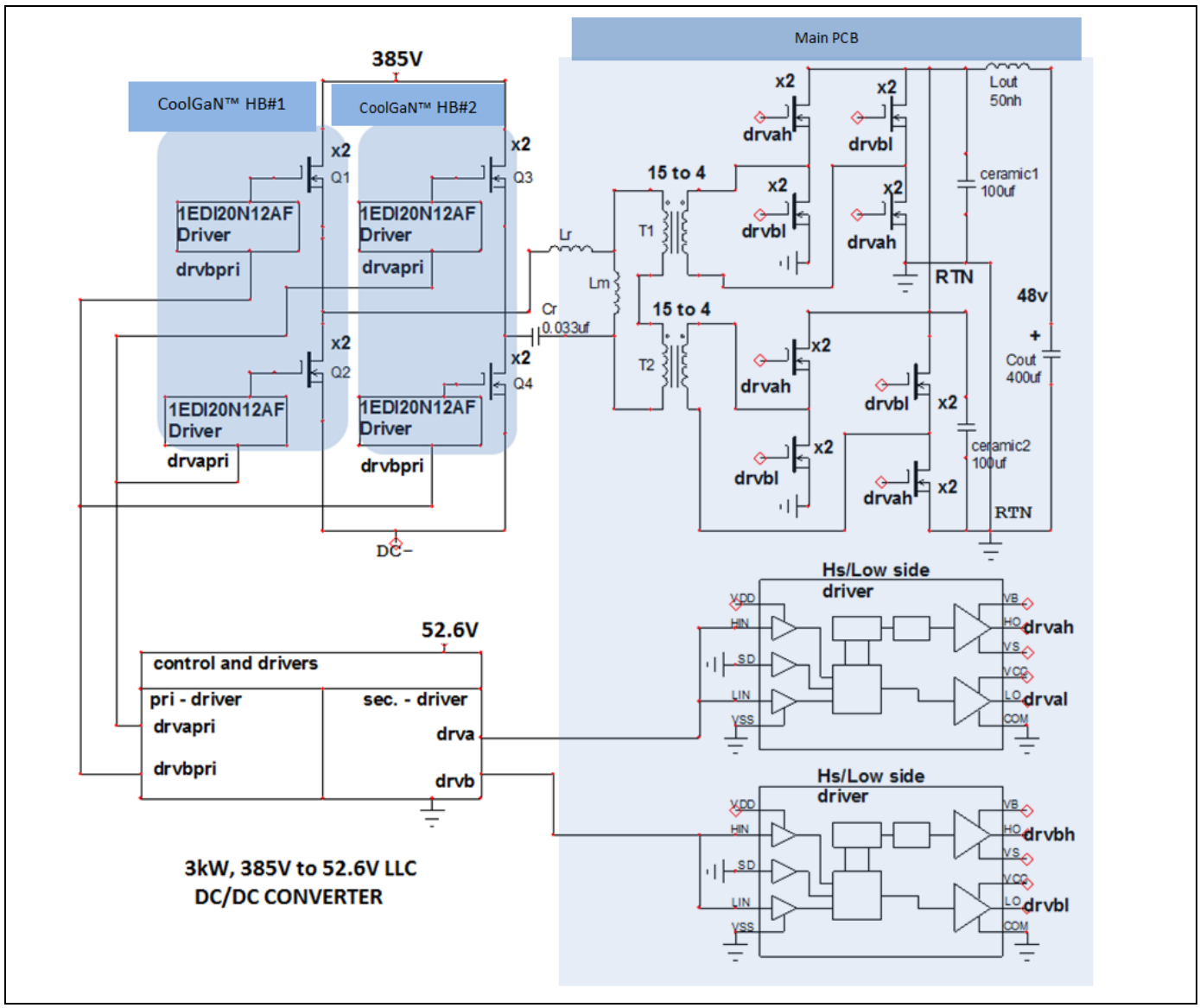

Figure 2 **3600 W LLC DC-DC 380 V to 52 V circuit description**

2 Electrical specifications

Table 1 Electrical specifications of CoolGaN™ evaluation board[1]

Symbol	Parameter	Min.	Typ.	Max.	Units	Conditions
V DC	DC input voltage	360	385	400	V	
I_{DC}	Input current	0.03	–	10.3	A	V_{in} = 360 V to 400 V, no load to full load
V_{out}	Output voltage	52.0	52	53.0	V	V_{in} = 360 V to 400 V, no load to full load
I_{out}	Output current	–	–	69	A	V_{in} = 360 V to 400 V
P_{out}	Output power	–	–	3600	W	V_{in} = 360 V to 400 V
	Step load transient	–	Below 3 percent (pk-pk)	–	mV	V_{in} = 360 to 400 V, I_{out} step-change from 34 A to 68 A, 1 A/µs
	Load/Line regulation	–	–	0.15 V		V_{in} = 360 to 400 V, I_{out} = 0 A to 68 A
	Output ripple voltage[3]	–	–	250		V_{in} = 385 V to 400 V
η	Efficiency[2]		**98.3 percent**			V_{in} = 385V, I_{out} = 50 percent and P_{out} = 1800 W
			97.5 percent			V_{in} = 385, I_{out} = 20 percent and P_{out} = 720 W
			98 percent			V_{in} = 385, I_{out} = 100 percent and P_{out} = 3600 W

[1] Operation at ambient temperature 24°C with forced air cooling (400 LFM)

[2] $Efficiency\ (\eta) = \frac{V_{out} * I_{out}}{(V_{in} * I_{in})-13.1W} \times 100$. Note: 13.1 W represents the bias and fan power internal losses.

[3] Measured with a 0.1 µf bypass cap with a cheating probe at 20 MHz bandwidth.

3 Features

- High-performance **IGT60R070D1 600 V 70 mΩ CoolGaN™** on the primary and BSC026N08NS (80 V, 2.6 mΩ max.) as the synchronous FETs
- 3600 W load at 52 V output
- Input range 360 V DC to 400 V DC
- 52 V regulated output at 69 A load continuous operation
- Efficiency greater than 98 percent at 50 percent load and efficiency greater than 97 percent for loads higher than 20 percent
- Soft-start
- Cycle-by-cycle current limiting on primary side. Latching mode over-current protection on the secondary side
- Higher power density 160 W/in^3 (box volume calculated excluding input and output connectors plus fan)
- Internal cooling (fan with ~ 400 LFM included)



Figure 3 3600 W LLC board dimensions

4 Electrical drawing, I/O connections

The electrical drawing showing efficiency measurements is below.

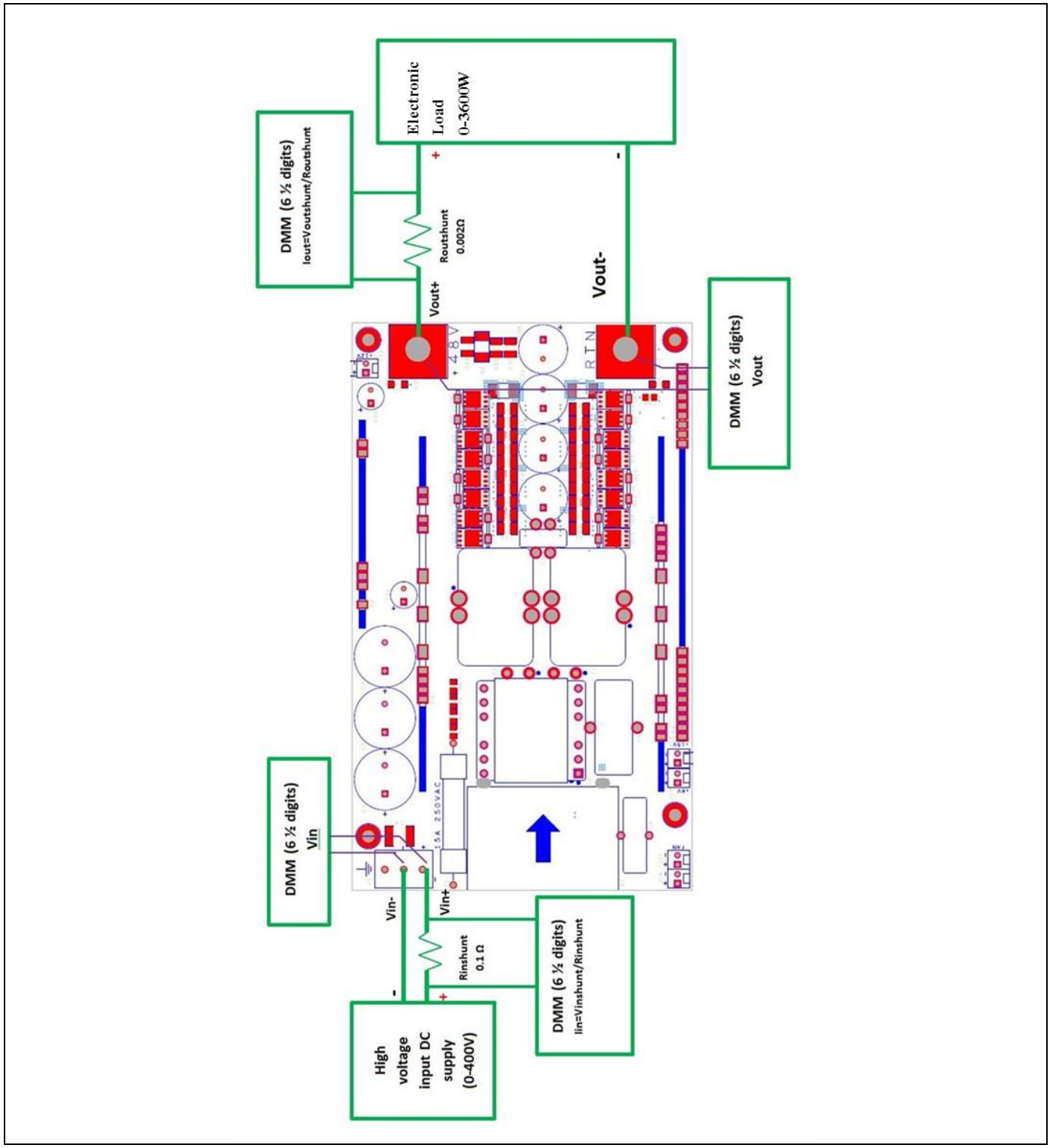

Figure 4 Electrical connection diagram

5 Necessary equipment

Voltage source

- HV DC input supply (~ 400 V) capable of 4000 W (recommended to connect the remote sense leads).

Load

- LV (less than 60 V) high current (greater than 69 A) electronic load (operated in constant current mode or constant resistance mode) (3600 W).

Measurement instruments

- Input current precision shunt resistor (10 A, 0.1 percent).
- Output current precision shunt resistor (100 A, 0.1 percent).
- Other
  - 6½ Digital Multi Meter (DMM) for input and output voltage measurement.
  - Differential voltage probes (greater than 500 V) for input measurements.

Recommended wire gauge

- Input – AWG #16 for connecting V_{in+} and V_{in-} to the HV DC input supply. It is also recommended to twist the input power leads (V_{in+} and V_{in-}).
- Output – AWG #8 for connecting V_{out+} and V_{out-} to the load.

6 Start-up and shut-down procedure

Start-up procedure

For start-up, please follow the steps given below to avoid damaging the evaluation board.

- Make sure the voltage at both input and output is below 40 V DC (input and output capacitors are discharged) before handling the evaluation board.
- Complete all the connections shown in Figure 4 including the input and output voltage and current measurements, DC input source and the electronic load.
- Turn on the HV DC input supply and increase the voltage to 385 V. Observe that the output voltage increases from 0 V (when V_{in} = 0 V) to ~ 52 V (when V_{in} is greater than 340 V).

Attention: ***Please note there is no inrush protection in the DC input to LLC demo board. Input voltage should ramp up at 20 ms (0 V to 385 V) or slower. Failure to do so could blow the input fuse.***

- Apply the electronic load at the desired load setting.

Shut-down procedure

For shut-down, please follow the steps given below to avoid damaging the evaluation board.

- Reduce load to 50 percent or below.
- Turn off and disconnect the HV DC input supply.

Attention: ***There still may be voltage across the input caps when input is switched off. Allow 5 seconds for voltage to discharge.***

- Turn off and disconnect the electronic load.
- Make sure the voltage at both input and output is below 40 V DC (input and output capacitors are discharged) before handling the evaluation board.

7 Other safety recommendations

The evaluation board must be handled by qualified personnel only. Some precautions include, but are not limited to, the ones listed below. These precautions must be exercised while operating the evaluation board.

- Avoid any contact with an energized evaluation board. Before handling the evaluation board, always ensure that the input and output capacitors are completely discharged.
- For measurement, please note that the primary side and secondary side have different reference grounds. Use differential voltage probes when making measurements on both side of the isolation (primary and secondary) with the same oscilloscope.
- User should note that the heatsinks on the LLC board are electrically live. Appropriate precautions must be taken to avoid contact with the heatsinks.
- User should ensure appropriate airflow (~ 400 LFM at CoolGaN™) to prevent the CoolGaN™ from overheating.

7.1 Hook-up points for measuring voltages and currents

Figures 5 and Figure 6 show the measurement points for the 3600 W LLC converter. The switching nodes can be measured on the primary side from the heatsinks identified below. The primary-side measurement points should be connected to the oscilloscope using isolated differential probes of at least 100 MHz bandwidth. Please do not use non-isolated voltage probes on the primary side. The secondary side switching nodes are accessible from the top side of the board. Use standard non-isolated scope probes with their return clamps on the probe referenced only to the output return lug, except for the secondary high-side MOSFET gate node. For this point use an isolated voltage probe referenced to the secondary-side switching node 2. It is also acceptable to use isolated probes on the secondary side too. The non-isolated or isolated voltage probes on the secondary side should have at least a 100 MHz bandwidth. The current probe used to measure the primary-side current should have at least a 30 A current rating with a 100 MHz bandwidth. Extreme care should be used for measuring any points not identified below, and take care not to short any heatsinks together. All primary heatsinks are live. The secondary heatsinks are tied to the +52 V output.

7.2 Hook up point reference drawings

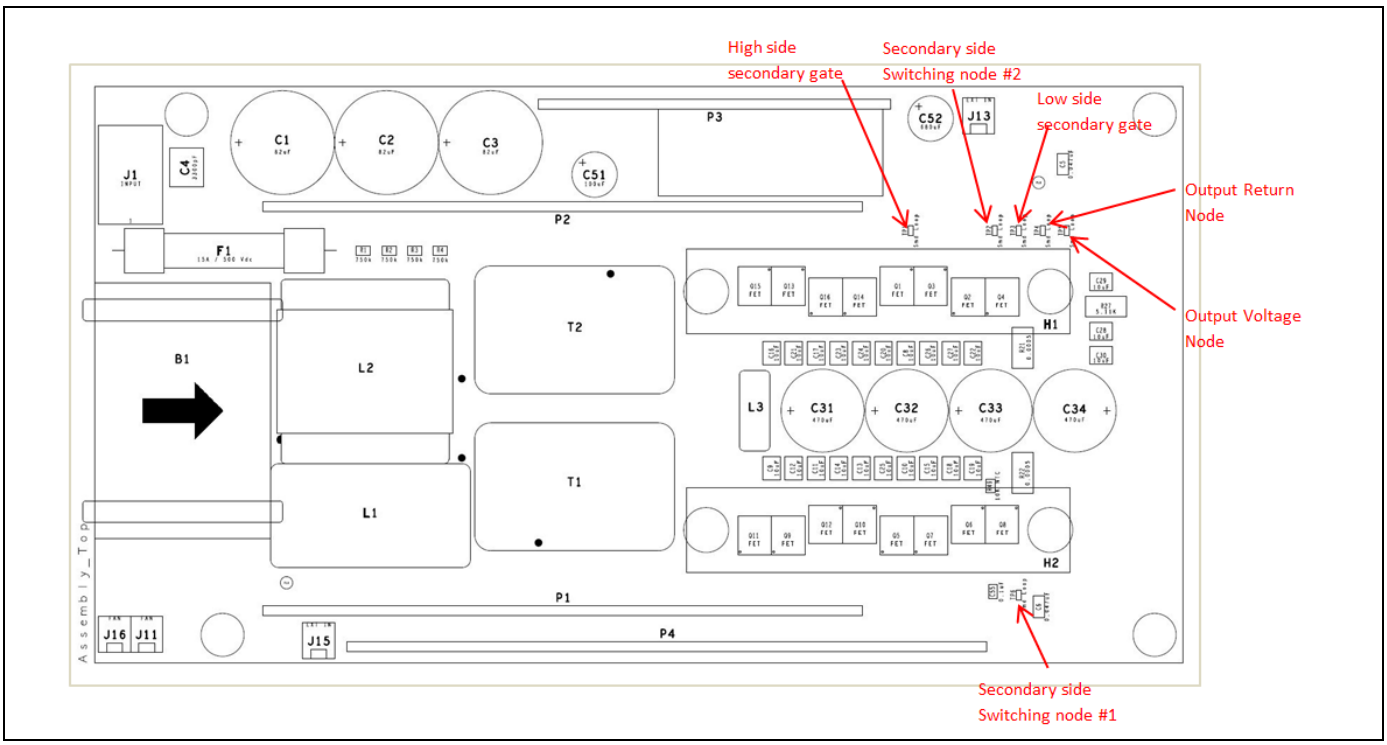

Figure 5 Top of main PCB showing secondary measurement points

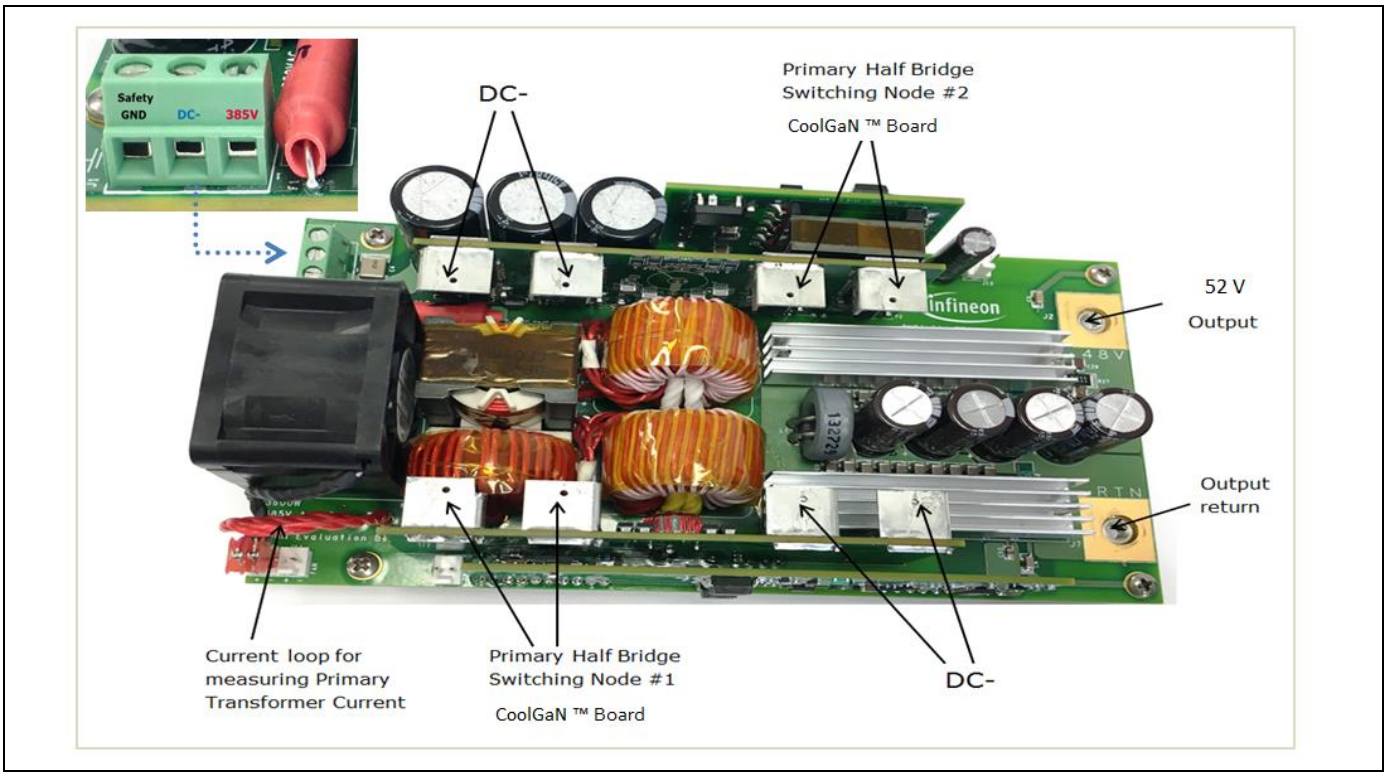

Figure 6 Top of main PCB showing primary measurement points

8 Schematics

8.1 52 V control board schematic page 1

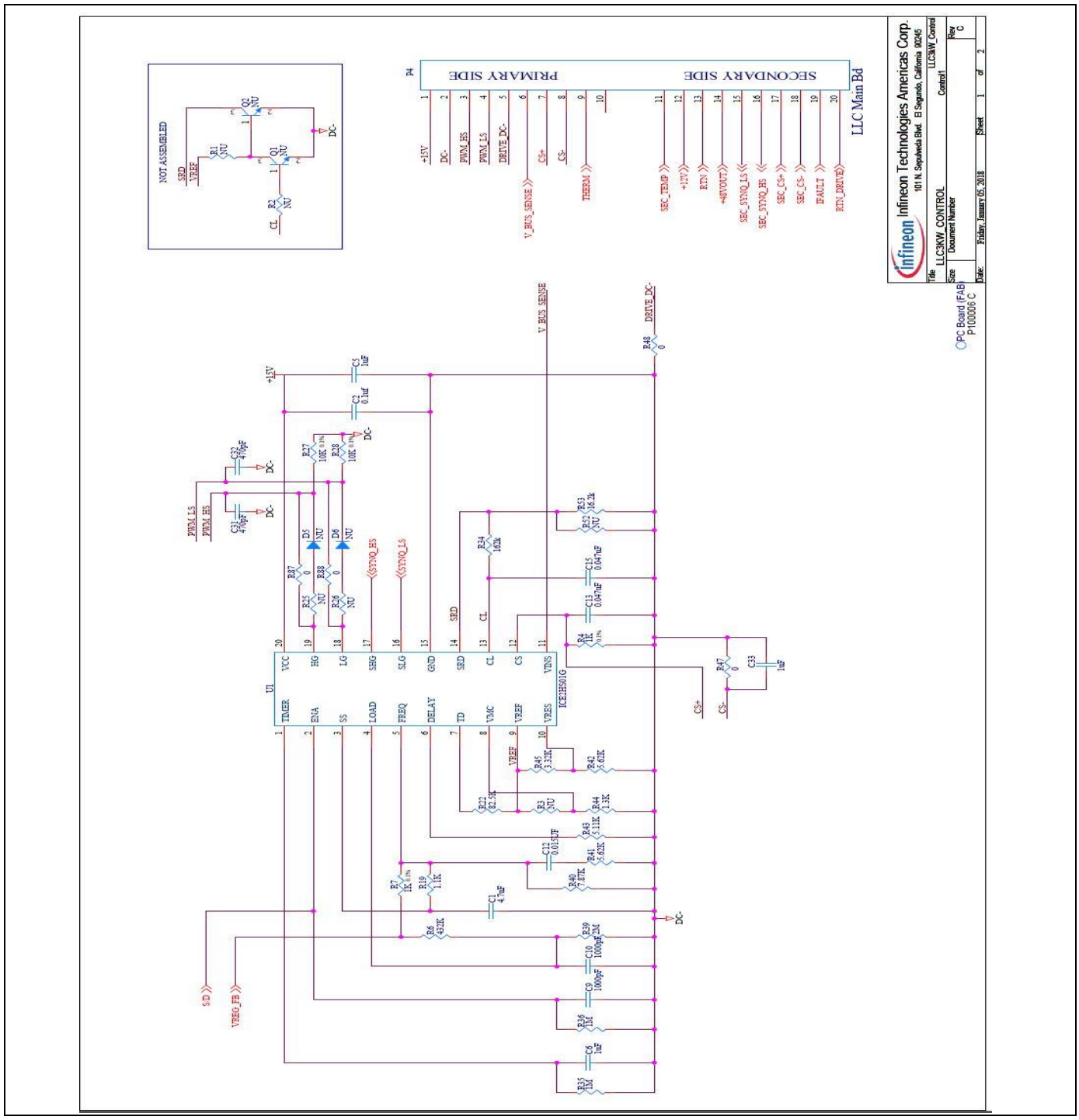

Figure 1 52 V control board schematic page 1

8.2 52 V control board schematic page 2

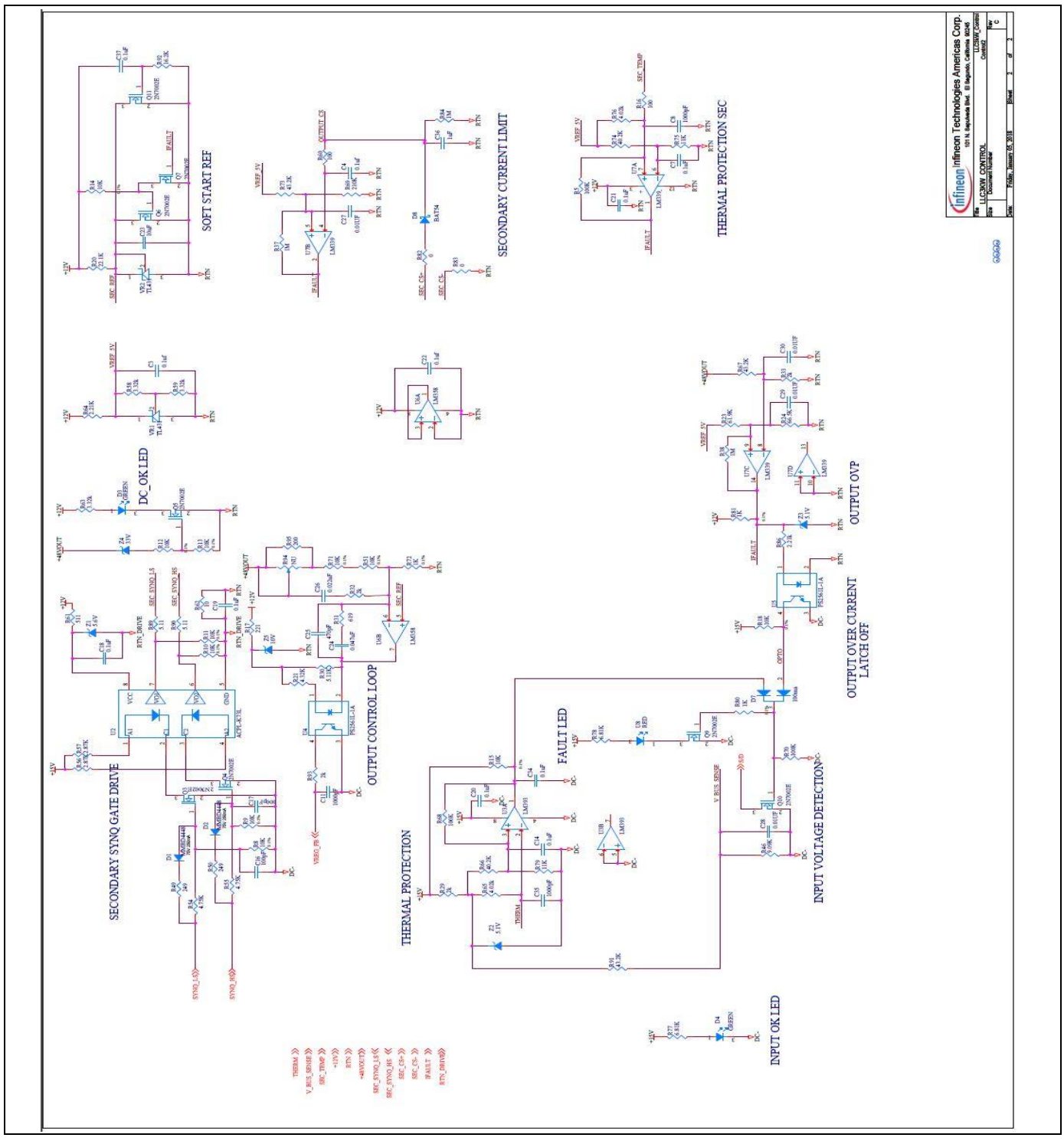

Figure 2 52 V control board schematic page 2

8.3 Control board component reference drawings

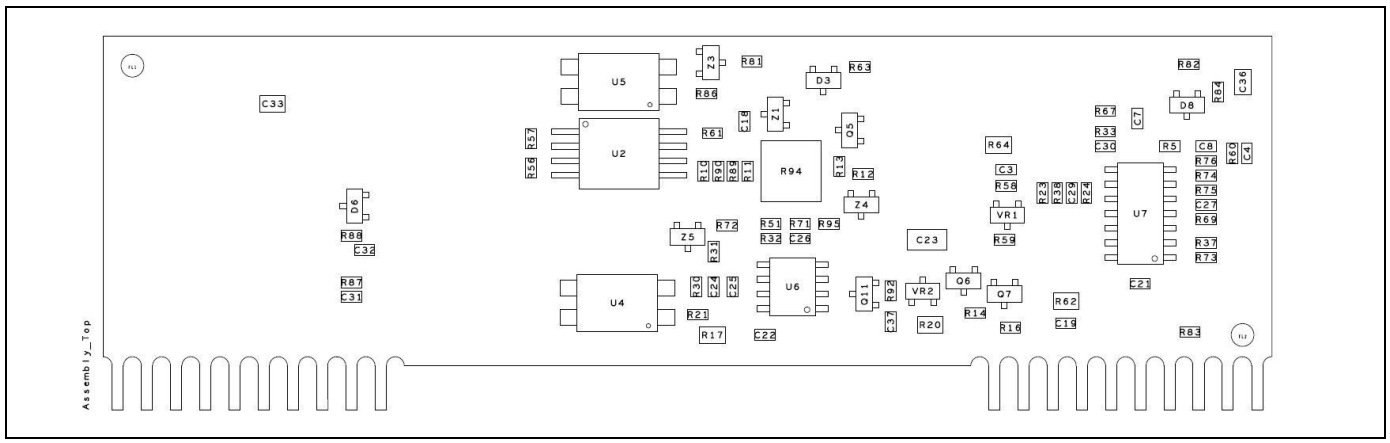

Figure 3 Control board assembly top side (secondary side)

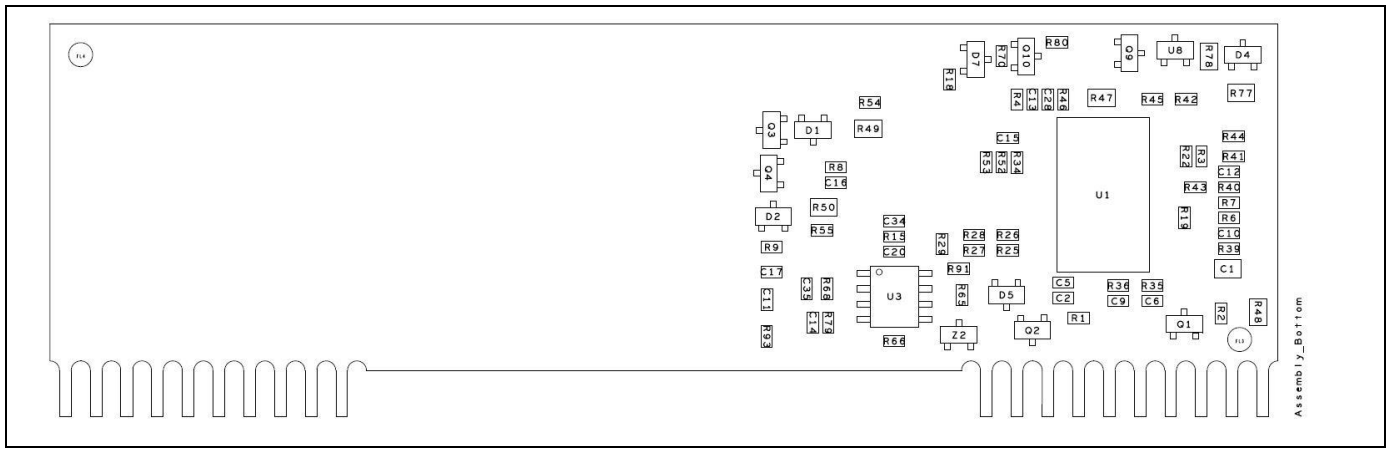

Figure 4 Control board assembly bottom side (primary side)

8.4 CoolGaN™ half-bridge schematic for boards 1 and 2

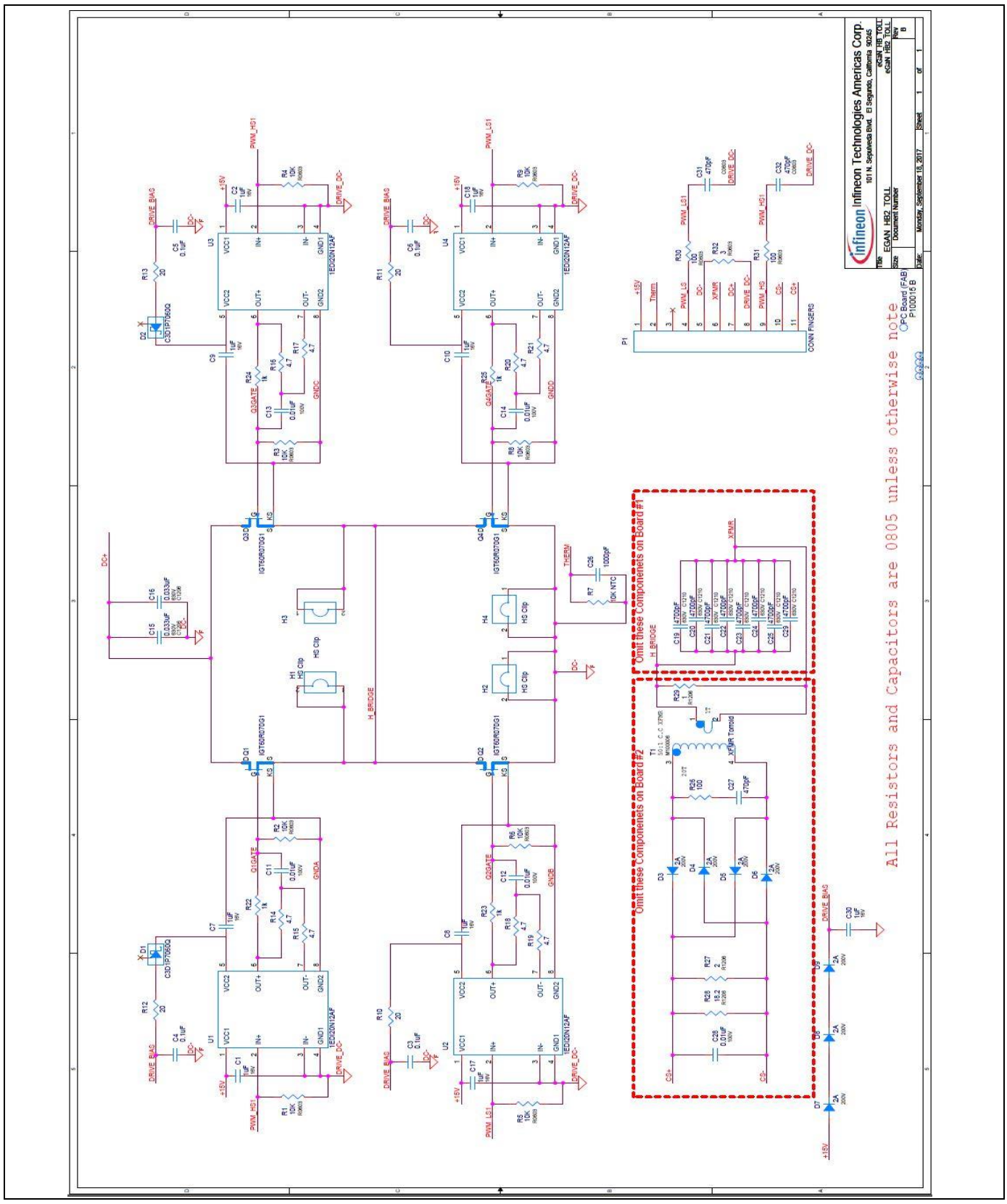

Figure 5 Full-bridge board schematic

8.5 CoolGaN™ half-bridge boards 1 and 2 component reference drawings

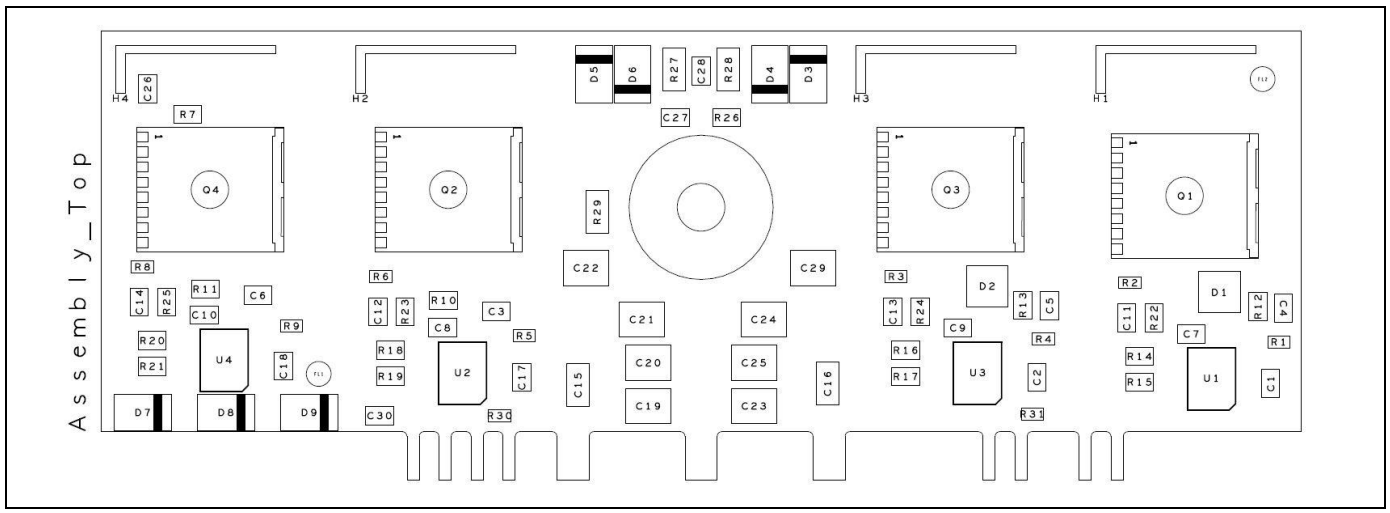

Figure 6 **Half-bridge board component reference drawing, top side**

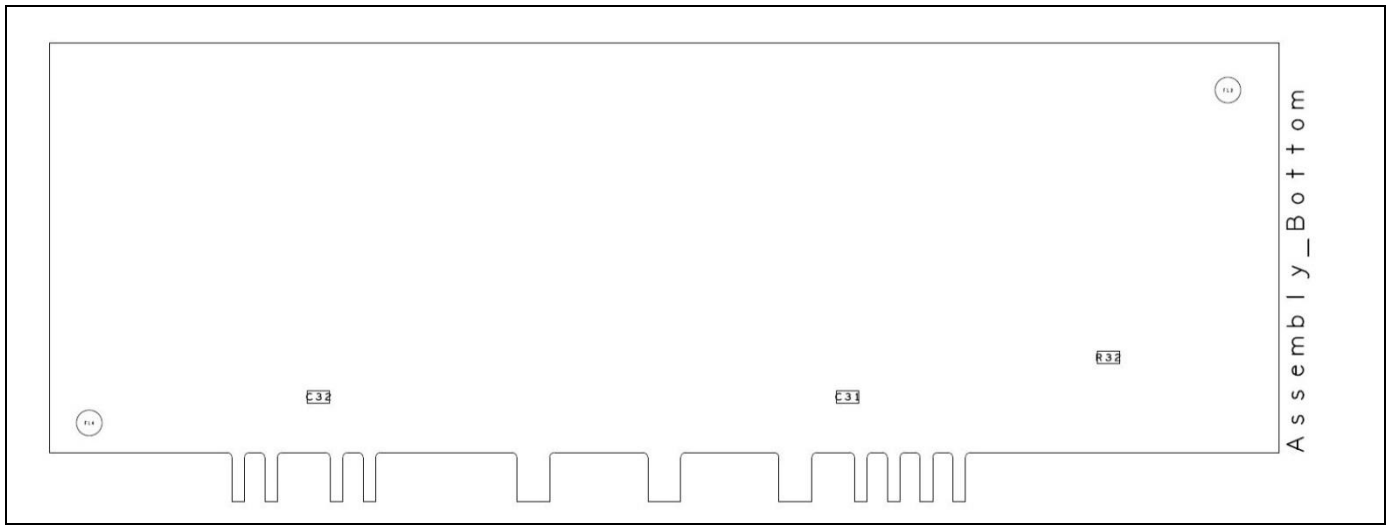

Figure 7 **Half-bridge board component reference drawing, bottom side**

8.6 Main power PCB schematic page 1

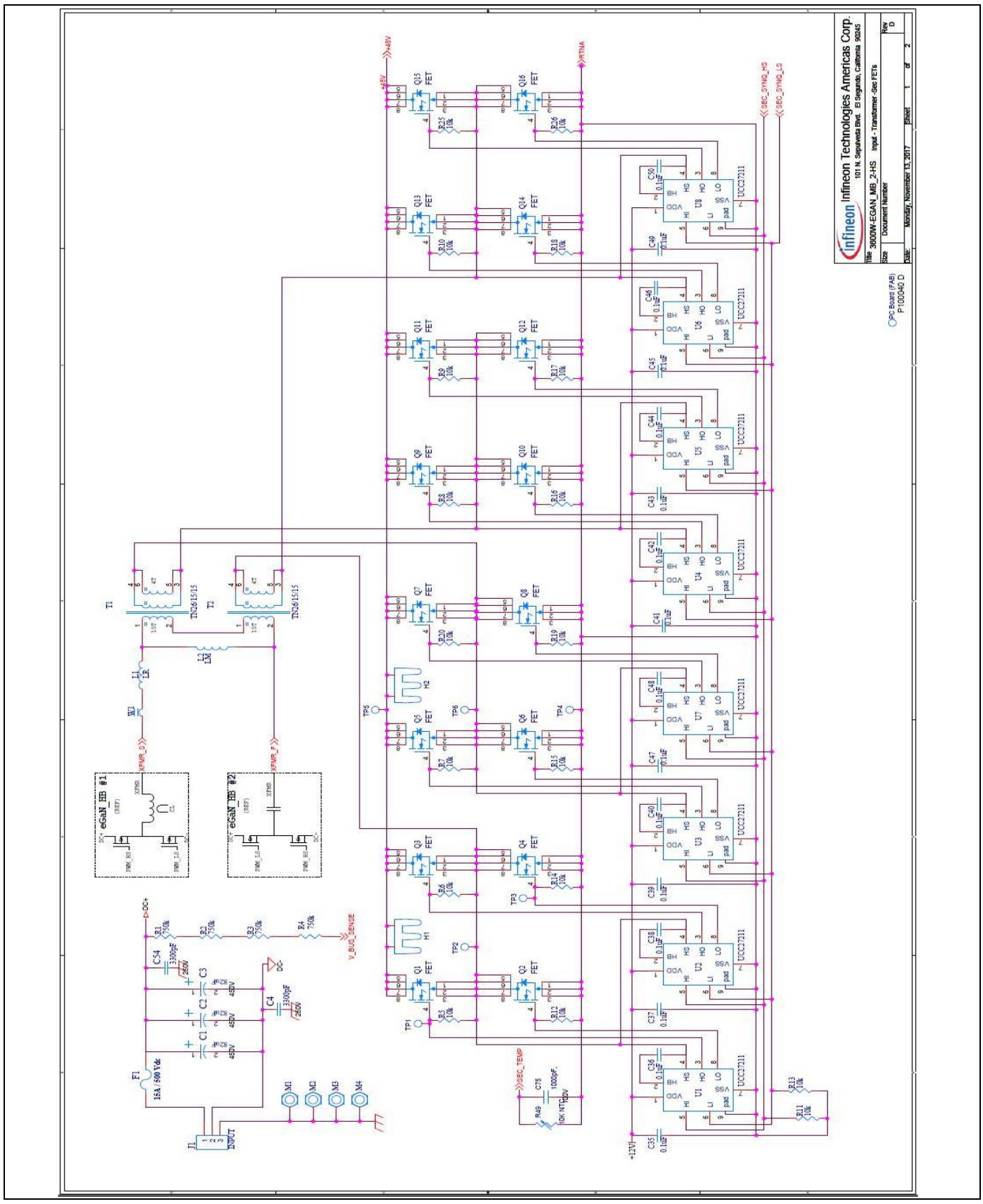

Figure 8 Main power PCB schematic page 1

8.7 Main power PCB schematic page 2

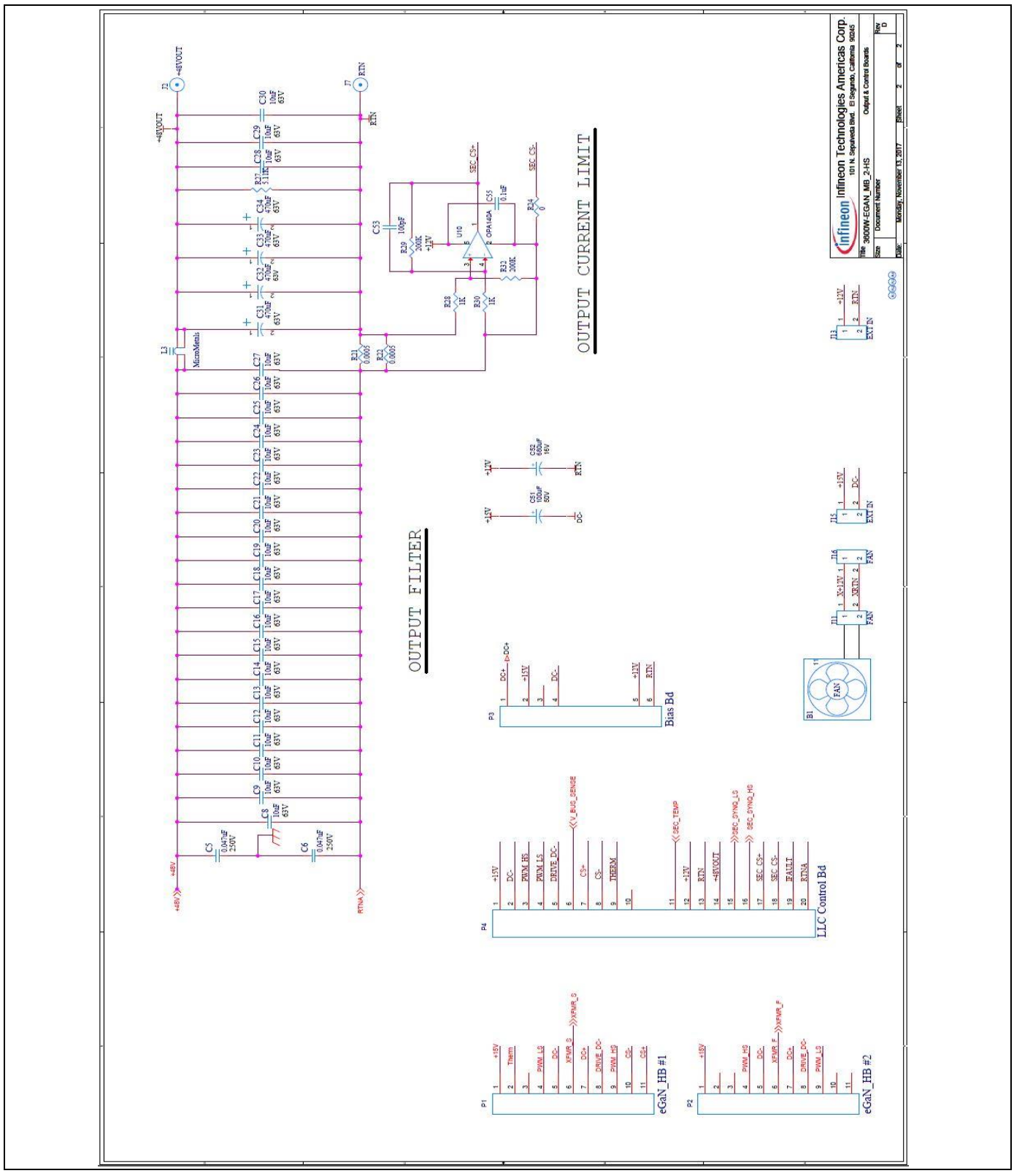

Figure 9 Main power PCB schematic page 2

8.8 Main power component reference drawings

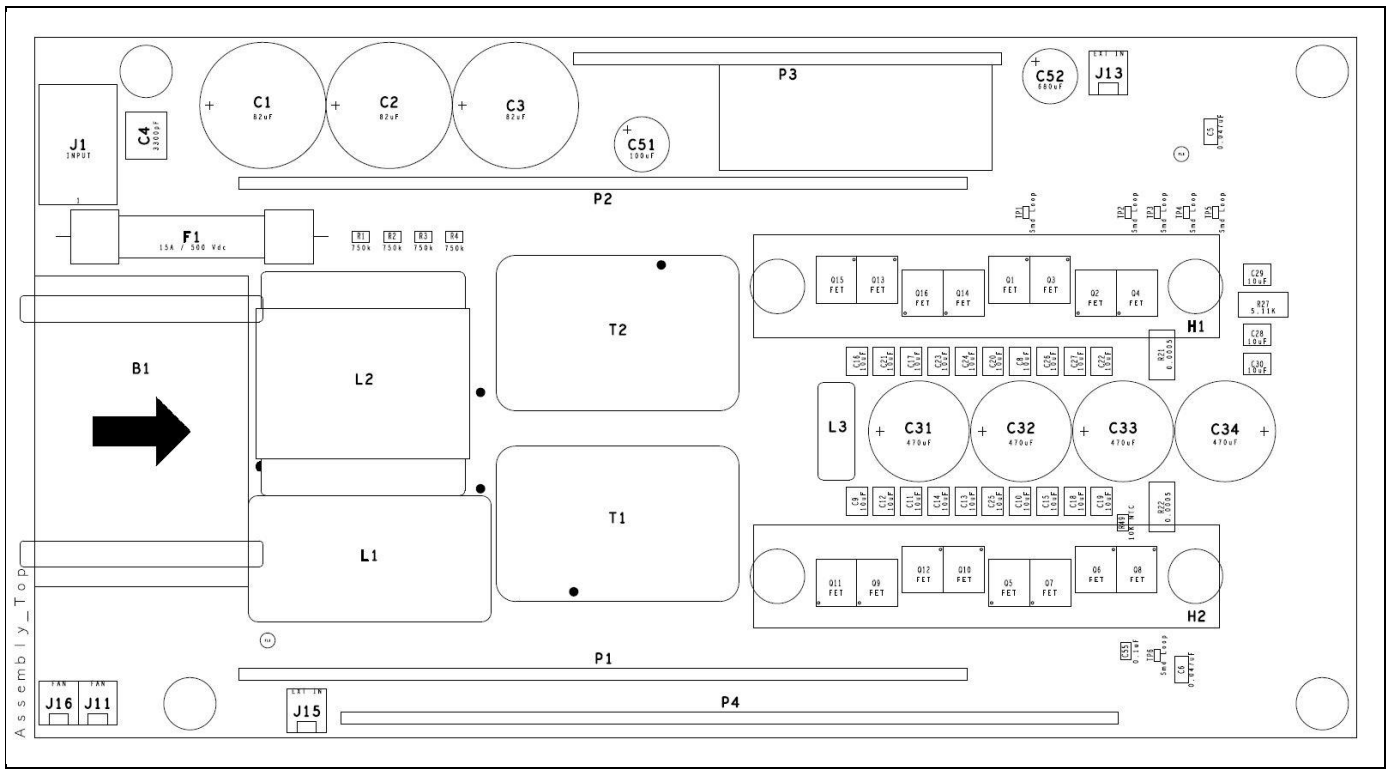

Figure 10 Main power board components reference drawing, top side

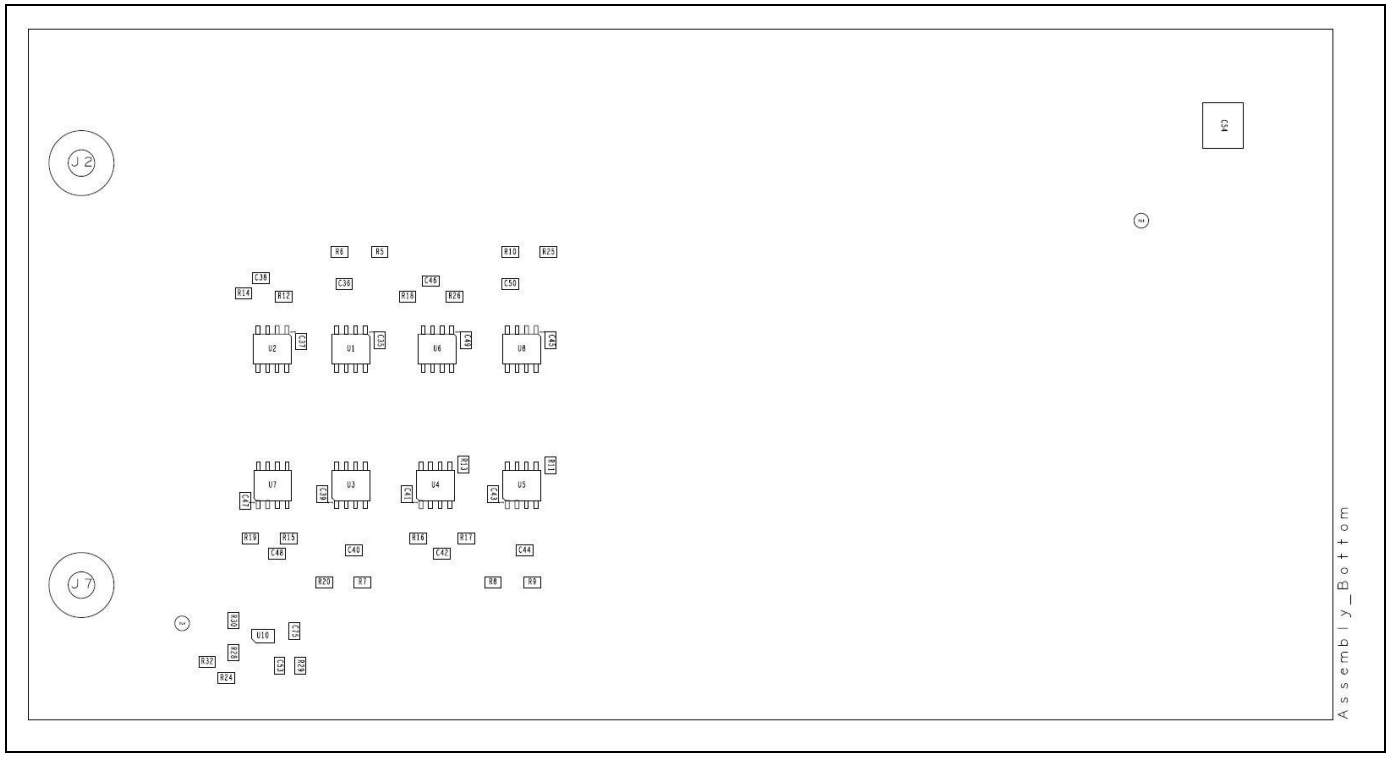

Figure 11 Main power board components reference drawing, bottom side

8.9 Bias board schematic

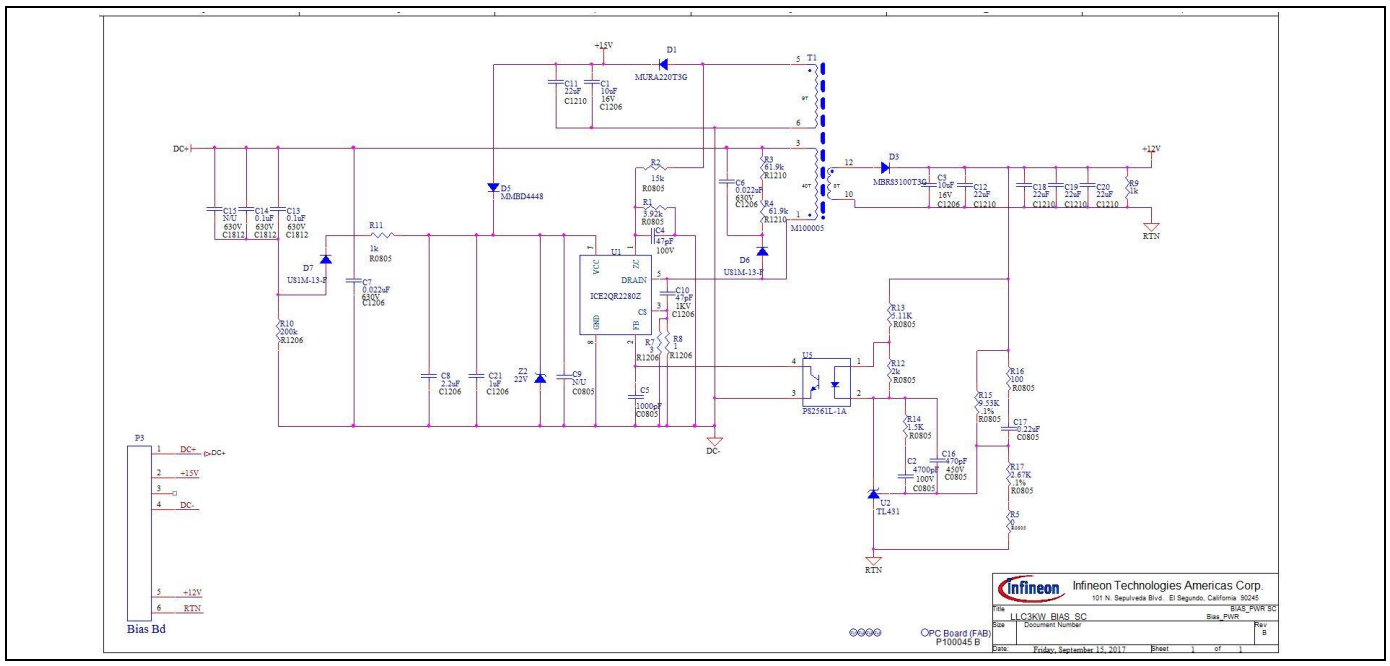

Figure 12 Bias board schematic

8.10 Bias board components reference drawings

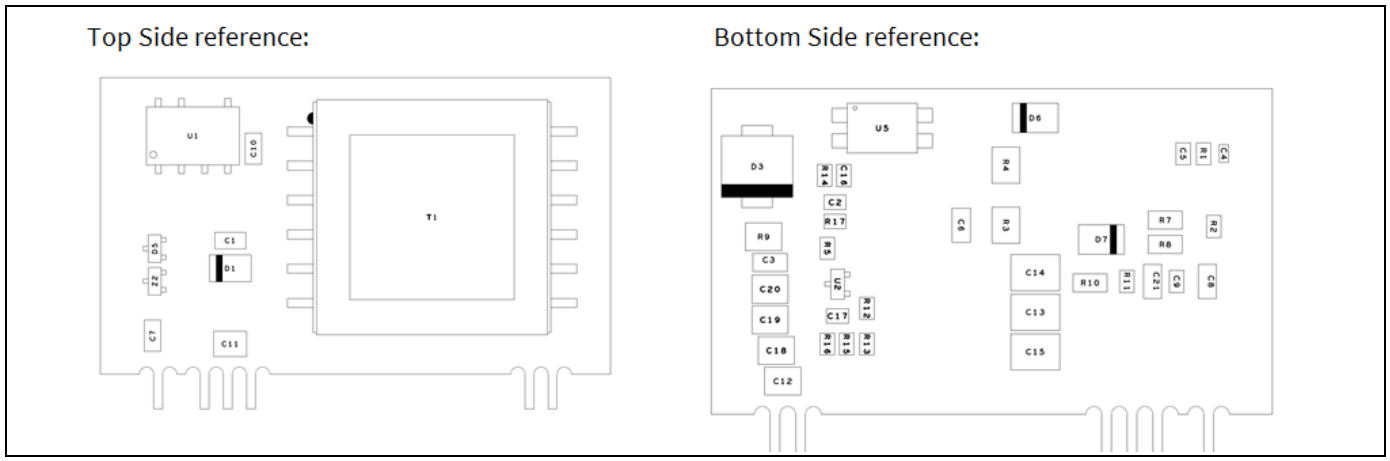

Figure 13 Bias board components reference drawings

9 Magnetic and heatsink drawings for LLC converter

9.1 Main transformer

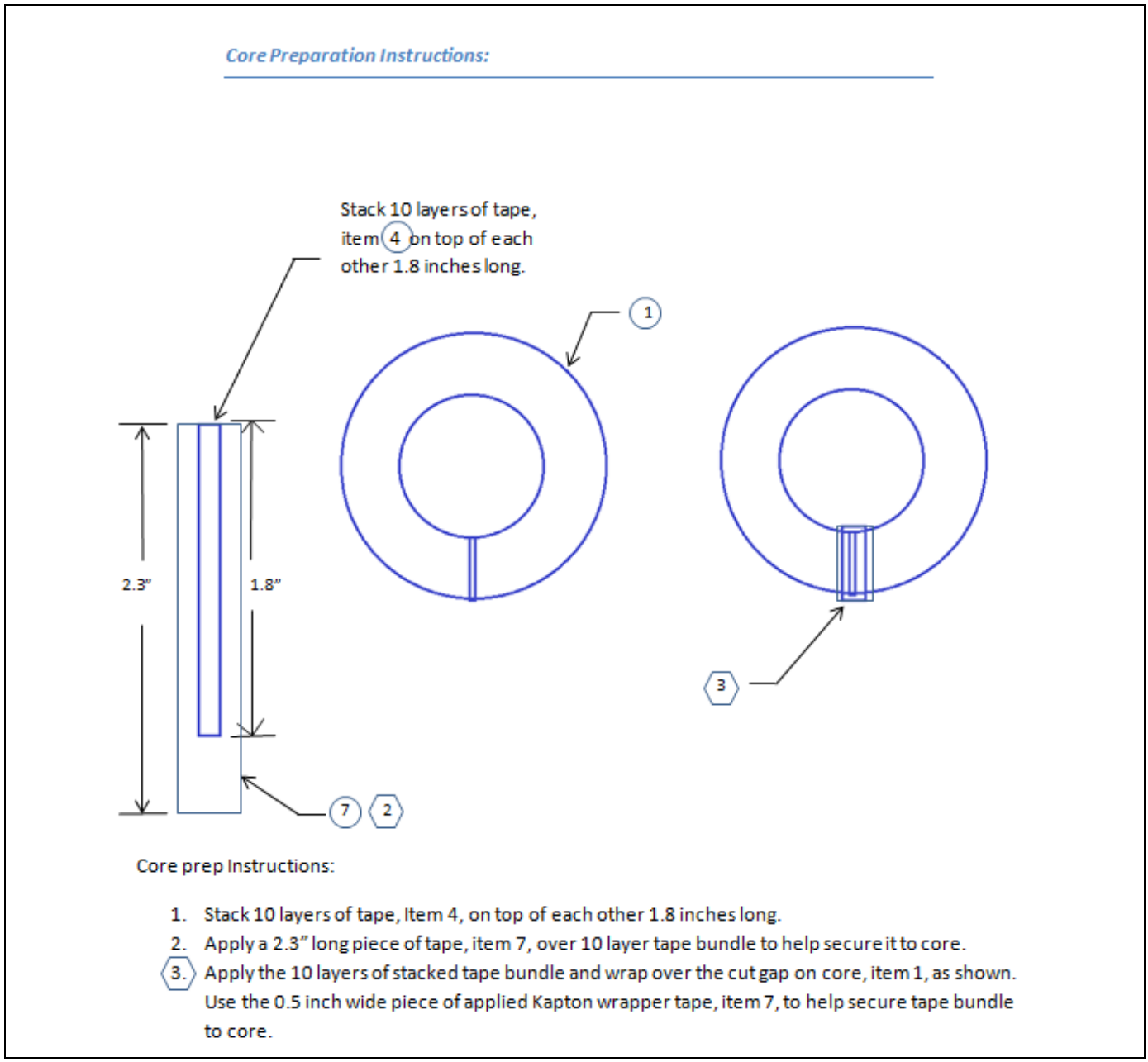

Figure 14 Main transformer assembly drawing page 1

Winding#	S 1 F	S 2 F	S 3 F	S 4 F	S 5 F	S 6 F	S 7 F
Wire type,size Ref des	2 filar x (250*44 bi layer litz) Item 2	5 filar x (75*41 litz) Item 3	5 filar x (75*41 litz) Item 3				
Turns	15	4	4				
Tapped	-	-	-				
Lead out Position	-	-	-				
Lead out type and length	flying	flying	flying				
Turns per layer	30	20	20				
Total layers	2 , 7	1	1				
Layer Insulation	-	-	-				
wrapper	-	-	-				
Terminals #'s	E1, E2	S1,S2	S3,S4				
Instructions	1,2,3,4,7	1,2,5	1,2,5				

Instructions:

1. Wind W1, W2 and W3 evenly across the entire toroid, item 1.
2. Identify start of the winding with a flag, item 4.
3. Strip start and finish lead 0.25" from the end and tin leads. See Diagram next page.
4. Twist start and finish flying leads 2 turns per inch. See Diagram next page.
5. Twist individual start and finish flying leads S1, S2, S3, S4 4 turns per inch before tinning leads 0.75" to bottom of core as shown. Apply 10 ga teflon sleeving, item 5 as shown. See Diagram next page.
6. Secure label using tape around entire circumference as shown, item 4.
7. Spiral the second partial layer of winding 1 evenly around core.

Figure 15 Main transformer assembly drawing page 2

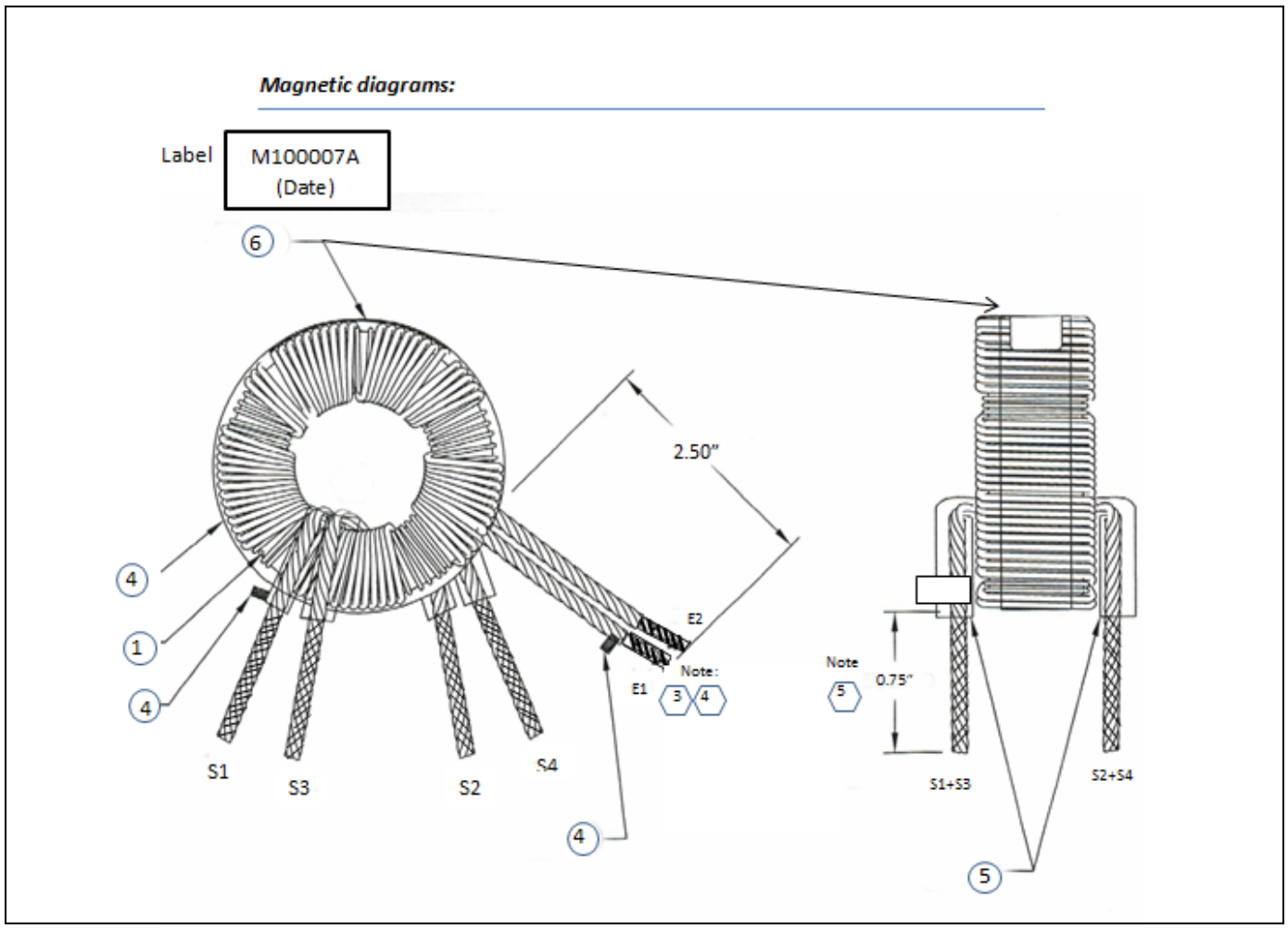

Figure 16 Main transformer assembly drawing page 3

Test Specifications:

Parameter	Terminals	Method- Instrument and settings	Limits
Inductance	E1 – E2	Set test frequency to 10Khz during test	70uh – 93uh
Leakage inductance	E1 – E2	Short secondary leads S1 S2, S3, S4 together and measure primary inductance at 10Khz.	0.5uh – 1.2uh
DC resistance			
Ratio and Phasing	E1 – E2	Apply 3.0 Vac @ 10khz	3.0 Vac (REF)
	S1 – S2		0.75vac – 0.85 Vac
	S3 – S4		0.75vac – 0.85 Vac
Leakage current			
Hipot testing	FROM E1	TO S1 + S3	3600 Vac / 1 sec
	FROM	TO	
	FROM	TO	

Schematic:

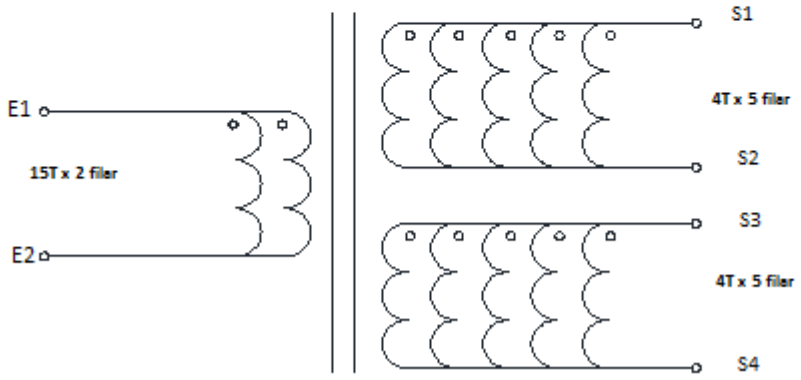

Figure 17 Main transformer assembly drawing page 4

Table 2 Main transformer bill of materials

Item	Description	Manufacturer	Part Number
1	Core # TN 26 / 15 / 15 – 3F36 material with 12mil (0.3 mm) gap	FERROXCUBE	TN26/15/15-3F36
2	Triple insulated LITZ wire. (230 strands of 44 gauge wire)	RUBADUE	TXXL230/44F3XX-2
3	LITZ wire. (75 strands of 41 gauge wire)	MWS	100141 SPNSN LITZ WIRE
4	3M™ 56 Polyimide Film Electrical Tape 0.25” wide, 3 mil	3M	1218 1/4” x 36 YD
5	Teflon sleeve 10ga diameter	3M	FP301-1/8-48-Yellow
6	Label	AVERY	1/2” LABEL 5418
7	KAPTON polyimide film tape 0.5” wide, 3 mil thick	3M	1218 1/2” x 36 YD

9.2 Bias transformer

Winding#	S 1 F	S 2 F	S 3 F	S 4 F	S 5 F	S 6 F	S 7 F
Wire type,size Ref des	Item 3	Item 3	Item 4				
Turns	40	9	8				
Tapped	-	-	-				
Lead out Position	-	-	-				
Lead out type and length	Self-Lead to Term	Self-Lead to Term	Self-Lead to Term				
Turns per layer	40	9	8				
Total layers	1						
Layer Insulation	-	-	-				
wrapper	1 Layer, Item 5	1 Layer, Item 5	1 Layer, Item 5				
Terminals #'s	1 , 3	5 , 6	12 , 10				
Instructions	1,2,3	1,2,3	1,2,3				

Instructions:

1. Wind W1, W2, and W3 evenly across the entire bobbin, item 2.
2. Solder all leads to their terminals.
3. Secure label using tape around entire circumference of core as shown, items 5 & 6.

Figure 18 Bias transformer assembly drawing page 1

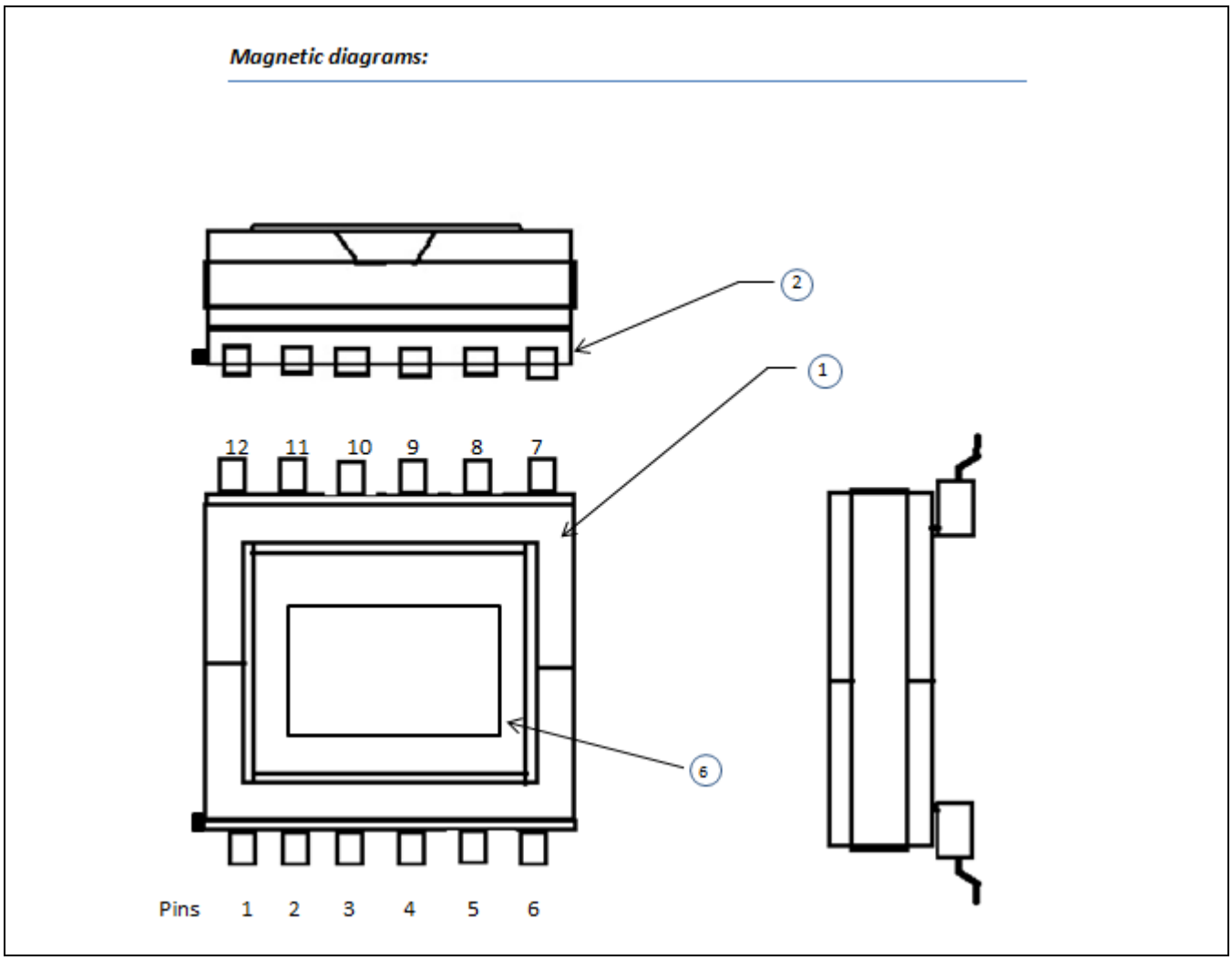

Figure 19 Bias transformer assembly drawing page 2

Test Specifications:

Parameter	Terminals	Method- Instrument and settings	Limits
Inductance	1 – 3 5 – 6 12 - 10	Set test frequency to 10Khz during test	450µh – 540µh 23µh – 29µh 18.1µh – 23µh
Leakage inductance			
DC resistance			
Ratio and Phasing	1 – 3	Apply 4.0 Vac @ 10khz	4.0 Vac (REF)
	5 – 6		0.85vac – 0.95 Vac
	12 - 10		0.75vac – 0.85 Vac
Leakage current			
Hipot testing	FROM 1 , 5	TO 12	3600 Vac / 1 sec
	FROM	TO	
	FROM	TO	

Schematic:

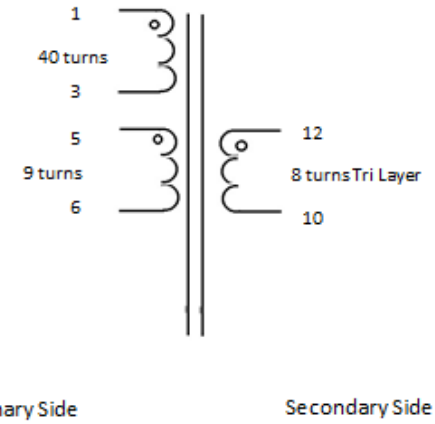

Figure 20 Bias transformer assembly drawing page 3

Table 3 Bias transformer bill of materials

Item	Description	Manufacturer	Part Number
1	Core# EFD25/13/9-3F3-A315 gapped core set	FERROXCUBE	EFD25/13/9-3F3-A315
2	FERROXCUBE bobbin #CSHS-EFD25-1S-12P	FERROXCUBE	CSHS-EFD25-1S-12P
3	28 Ga HYNZ wire red	MWS	28 HPN-155-RED
4	28 Ga Triple insulated yellow wire	RUBADUE	T28A01FXXX-2
5	3M™ 56 Polyimide Film Electrical Tape 0.25” wide, 3 mil thick	3M	1218 ¼” x 36 YD
6	Label	AVERY	½” LABEL 5418

9.3 Lresonant inductor

Winding#	S 1 F	S 2 F	S 3 F	S 4 F	S 5 F	S 6 F	S 7 F
Wire type,size Ref des	2 filar x (250*44 ts layer litz)						
Turns	18						
Tapped	-						
Lead out Position	-						
Lead out type and length	Self-lead						
Turns per layer	18						
Total layers	1						
Layer Insulation	-						
wrapper	-						
Terminals #'s	1 - 2						
Instructions	1,2,3,4						

Instructions:

1. Wind evenly across the entire bobbin.
2. Twist bifilar wires 4 turns per inch and tin leads 0.5 inch to bottom of core as shown.

Figure 21 Resonant inductor assembly drawing page 1

Magnetic diagrams:

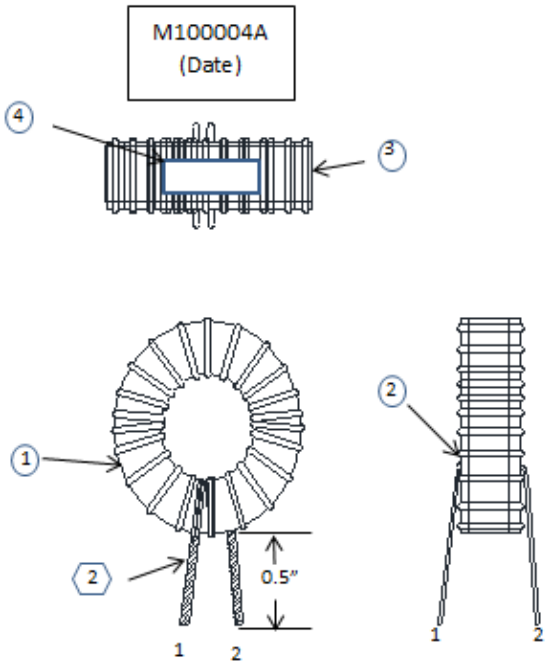

Figure 22 Resonant inductor assembly drawing page 2

Test Specifications:

Parameter	Terminals	Method- Instrument and settings	Limits
Inductance	1 - 2	Set test frequency to 10Khz during test	3.5uh – 4.9uh
Leakage inductance			
DC resistance			
Ratio and Phasing		Apply Vac @ 10khz	
Leakage current			

Schematic:

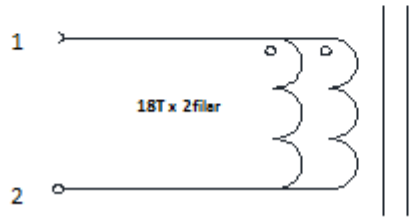

Figure 23 Resonant inductor assembly drawing page 3

Table 4 Resonant inductor bill of materials

Item	Description	Manufacturer	Part Number
1	Core	MICROMETALS	T106-2
2	Triple insulated LITZ wire. (230 strands of 44 gauge wire)	RUBADUE	TXXL230/44F3XX-2
3	3M™ 56 Polyimide Film Electrical Tape 0.25” wide, 3 mil	3M	1218 ¼” x 36 YD
4	Label	AVERY	½” LABEL 5418

9.4 Lmag parallel inductor with XFMR primary side

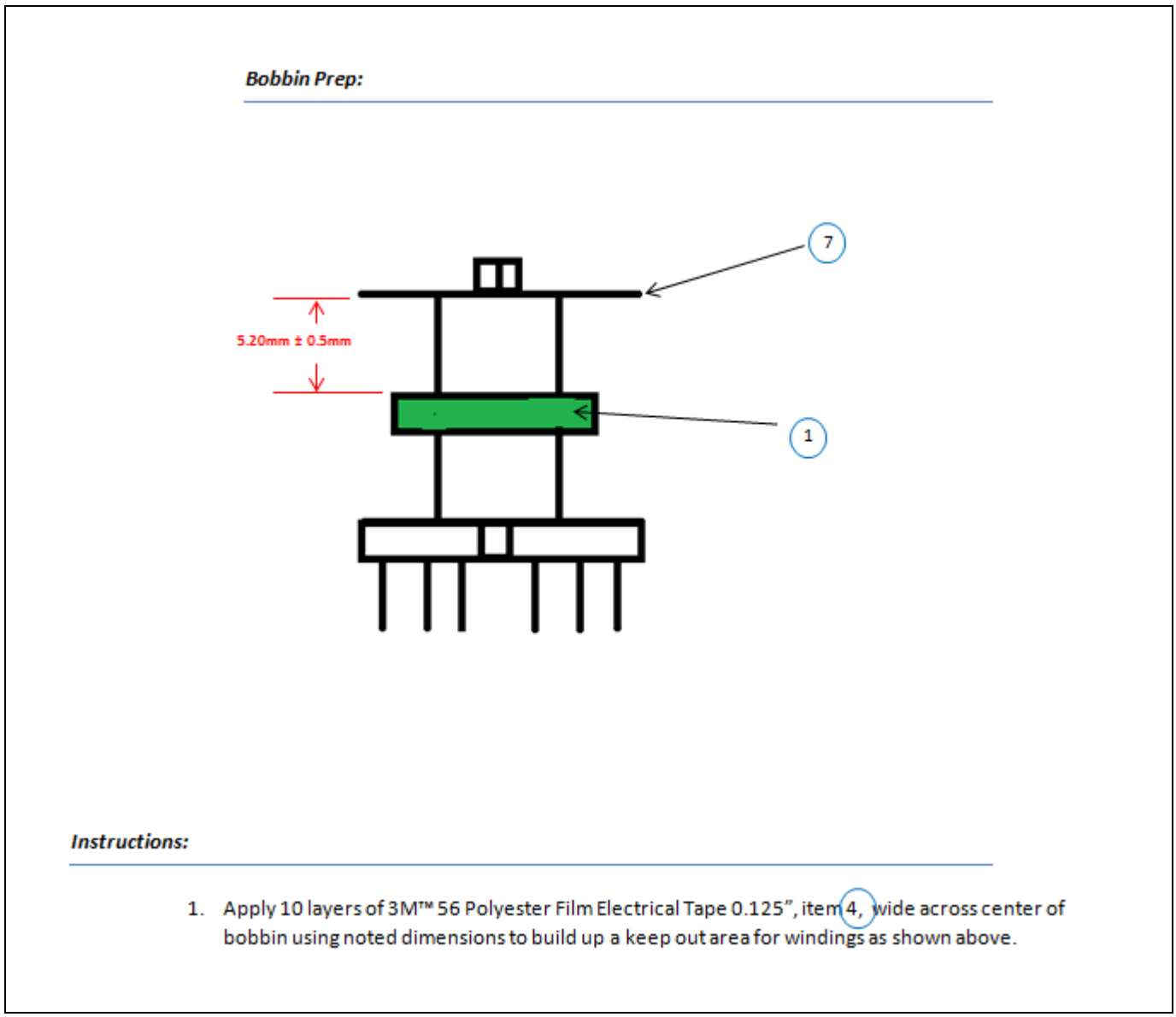

Figure 24 Lmag parallel inductor assembly drawing page 1

Winding#	S 1 F	S 2 F	S 3 F	S 4 F	S 5 F	S 6 F	S 7 F
Wire type,size Ref des	(40*40 bi layer litz) Item (2)						
Turns	32						
Tapped	-						
Lead out Position	3 - 4						
Lead out type and length	Self-lead						
Turns per layer	16						
Total layers	2						
Layer Insulation	-						
wrapper	-						
Terminals #'s	3 - 4						
Instructions	1,2,3,4						

Instructions:

1. Wind 16 turns in each pocket of bobbin keeping wire out of center area.
2. Twist individual start and finish to terminals 3 and 4 and solder to bobbin as shown.
3. Apply 0.02" gap, item 5, on each leg of core and wrap tape, item 3, around core to secure.
4. Apply Loctite over corners of core over gap, item 8.

Figure 25 Lmag parallel inductor assembly drawing page 2

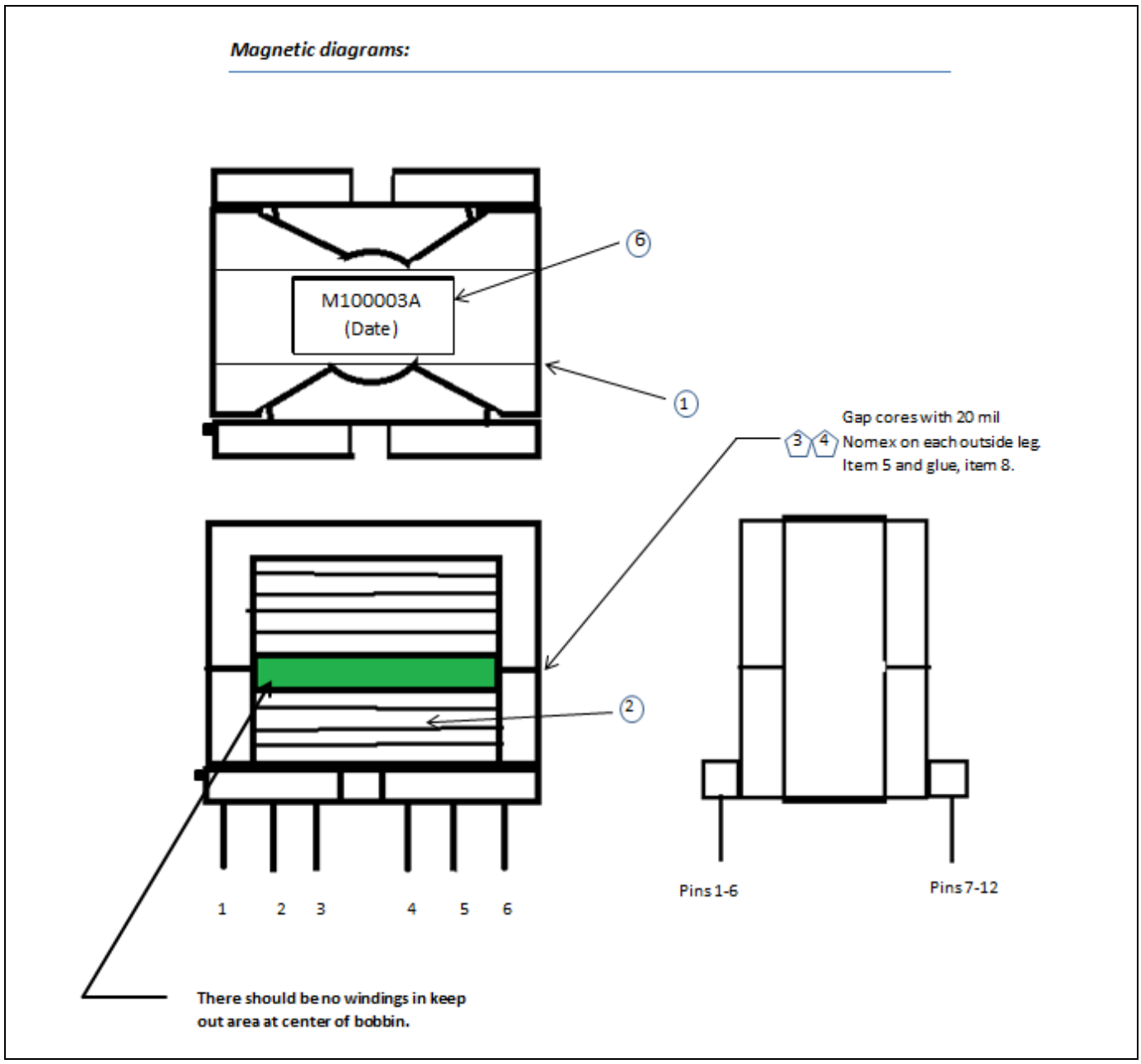

Figure 26 Lmag parallel inductor assembly drawing page 3

Test Specifications:

Parameter	Terminals	Method- Instrument and settings	Limits
Inductance	1 - 2	Set test frequency to 10Khz during test	180uh – 220uh
Leakage inductance			
DC resistance			
Ratio and Phasing		Apply Vac @ 10khz	
Leakage current			

Schematic:

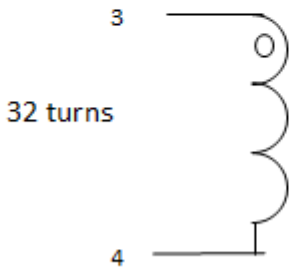

Figure 27 Lmag parallel inductor assembly drawing page 5

Table 5 Lmag parallel inductor bill of materials

Item	Description	Manufacturer	Part Number
1	Core# PQ26/25 – 3F36 material	FERROXCUBE	PQ26/25 – 3F36
2	Triple insulated LITZ wire. (40 strands of 40 gauge wire)	RUBADUE	TXXL40/40XXX-2
3	3M™ 56 Polyimide Film Electrical Tape 0.25” wide, 3 mil	3M	1218 1/4” x 36 YD

Item	Description	Manufacturer	Part Number
4	3M™ 56 Polyimide Film Electrical Tape 0.125” wide, 3 mil	3M	1218 1/8” x 36 YD
5	20 mil NOMEX paper	DUPONT	NOMEX 410
6	Label	AVERY	½” LABEL 5418
7	Bobbin	FERROXCUBE	CPV-PQ26/25-1S-12P-Z
8	Loctite glue	HENKEL	LOCTITE 4203

9.5 Current transformer

Winding#	S 1 F	S 2 F	S 3 F	S 4 F	S 5 F	S 6 F	S 7 F
Wire type,size Ref des	30 AWG Hynz Item 2	18 Ga UL1569 Item 3					
Turns	50	1					
Tapped	-	-					
Lead out Position	-	-					
Lead out type and length	Flying	Flying					
Turns per layer	50	1					
Total layers	1	1					
Layer Insulation	-	-					
wrapper	-	-					
Terminals #’s	E1 - E2	E3 – E4					
Instructions	1,2,	1,3					

Instructions:

1. Wind evenly across the entire bobbin.
2. Tin leads E1 and E2 on winding number one, 1 inch long at half an inch away from bottom of core as shown.
3. Strip and tin leads on winding number two, 1 inch long to bottom of core as shown.

Figure 28 Current transformer assembly drawing page 1

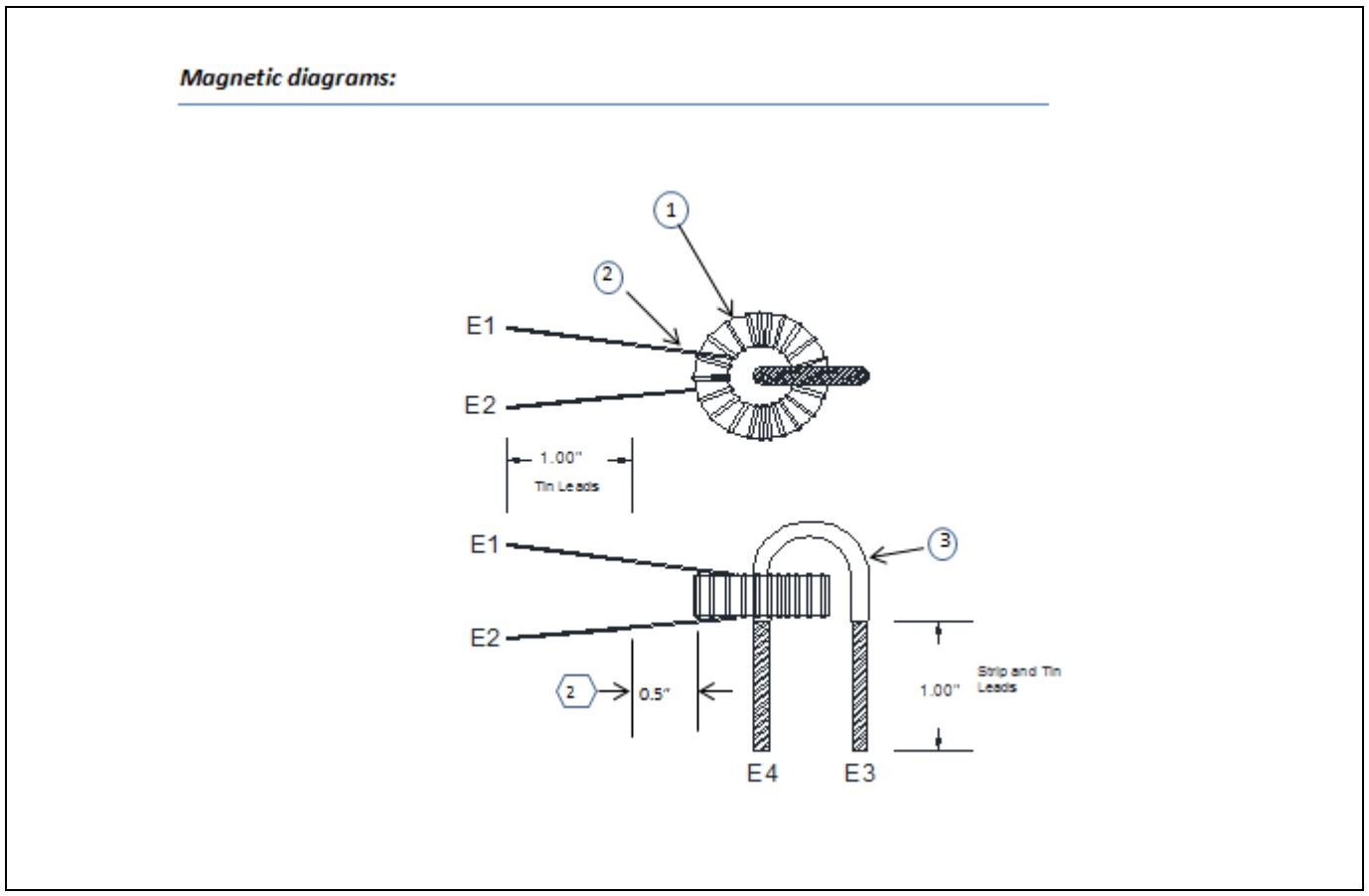

Figure 29 Current transformer assembly drawing page 2

Test Specifications:

Parameter	Terminals	Method- Instrument and settings	Limits
Inductance	E1 - E2	Set test frequency to 10Khz during test	4000uh – 7000uh
Leakage inductance			
DC resistance			
Ratio and Phasing		Apply Vac @ 10khz	
Leakage current			

Schematic:

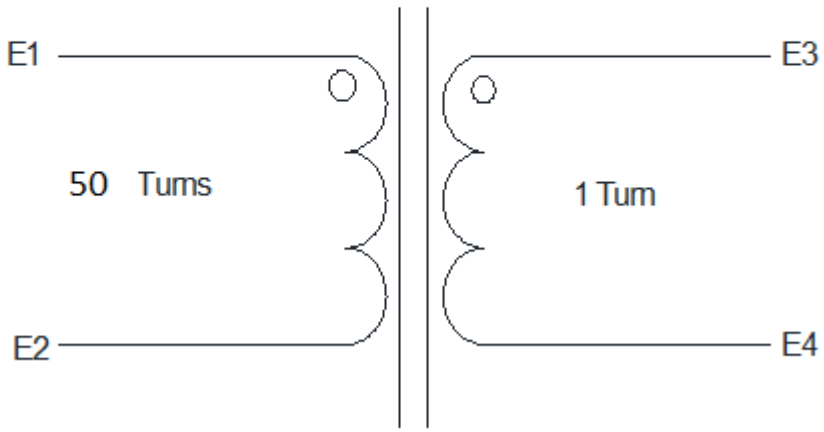

Figure 30 Current transformer assembly drawing page 3

Table 6 Current transformer bill of materials

Item	Description	Manufacturer	Part Number
1	Magnetics core # 41005-TC with P type material	MAG INC	ZP41005TC
2	30 Ga HYNZ wire	MWS	30 HPN-155-RED
3	18 Ga UL1569 wire	RUBADUE	T18A01FXXX-2

9.6 Primary heatsink

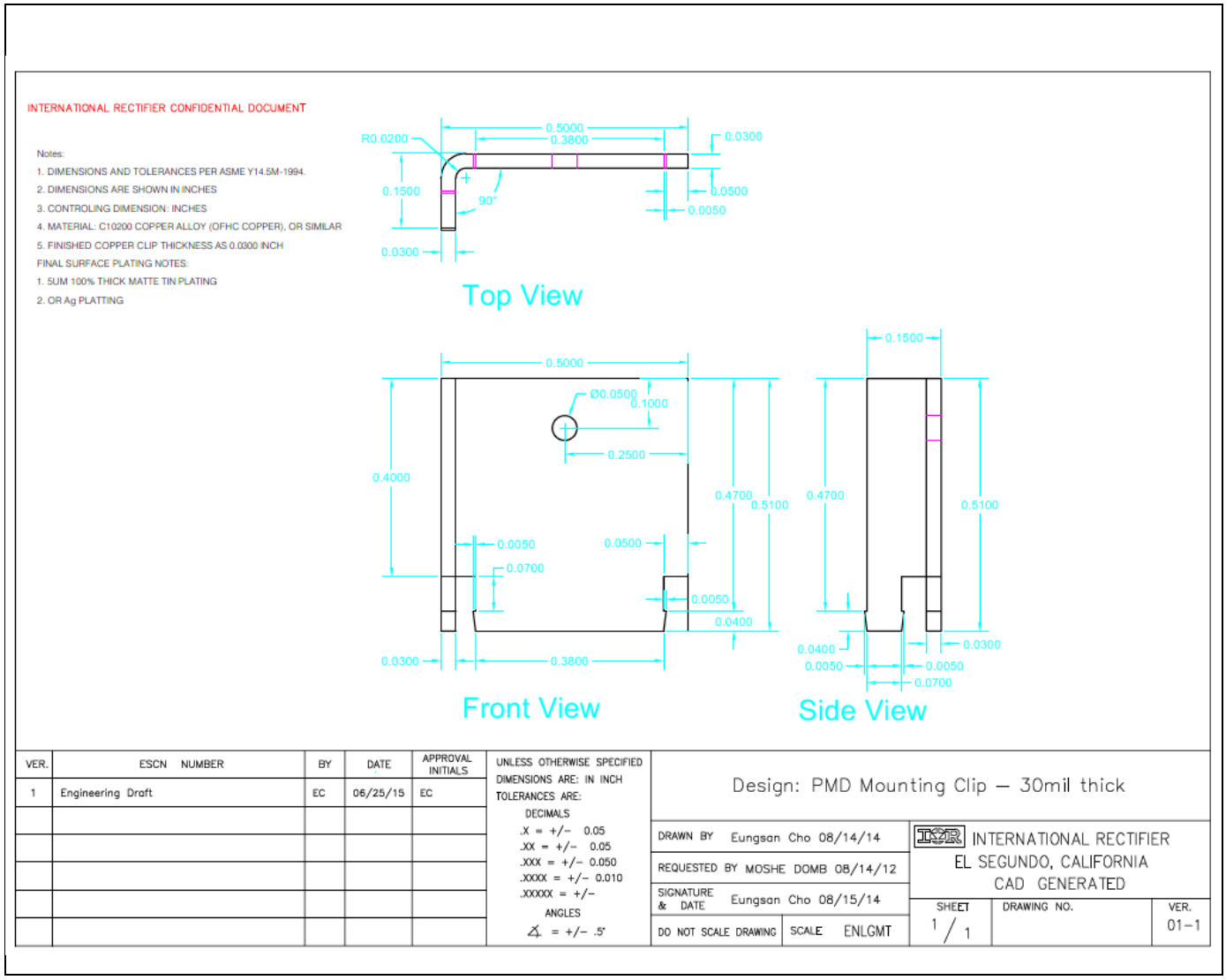

Figure 31 Primary heatsink fabrication drawing

9.7 Secondary heatsink

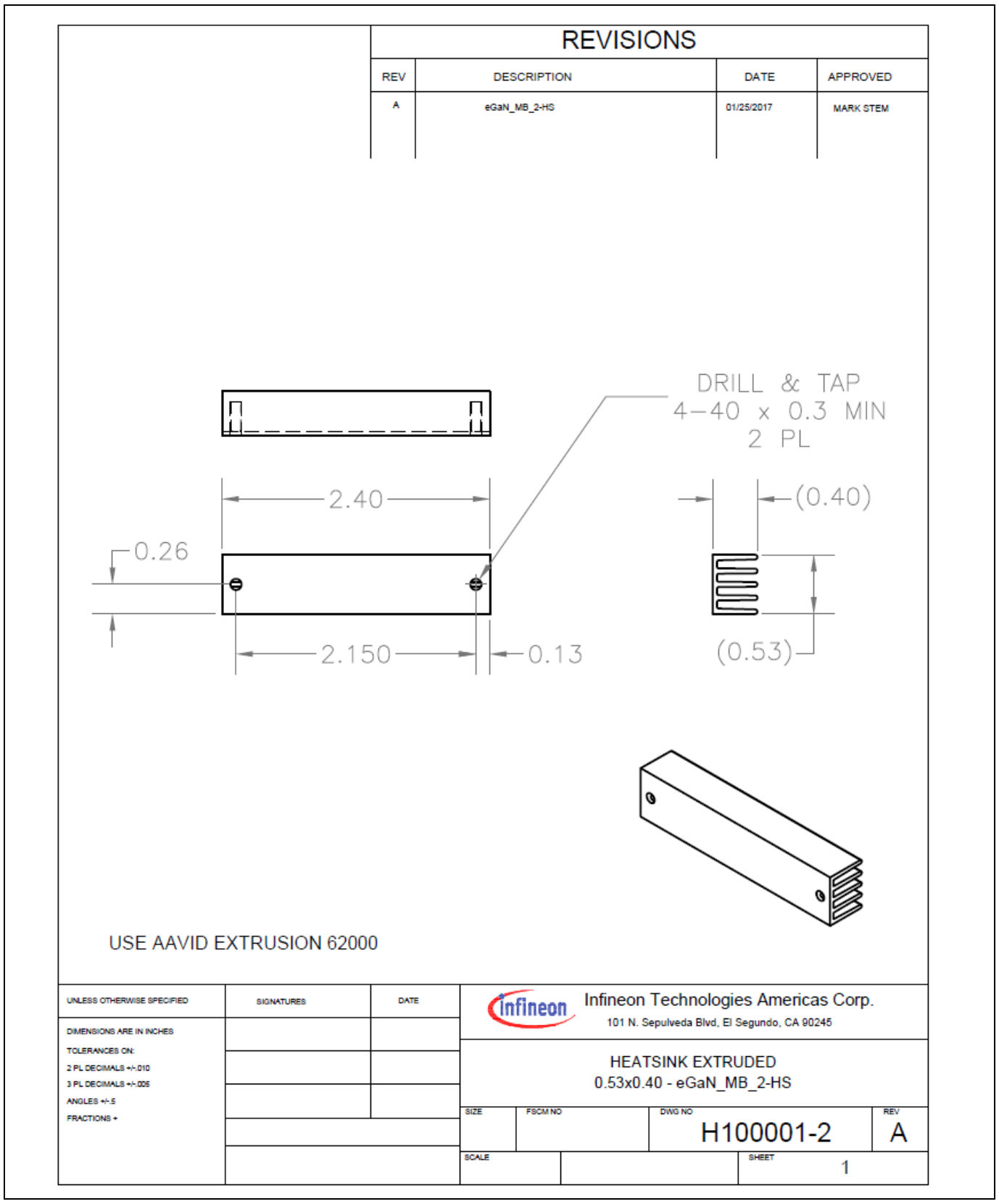

Figure 32 Secondary heatsink fabrication drawing

9.8 Secondary heatsink thermal pad

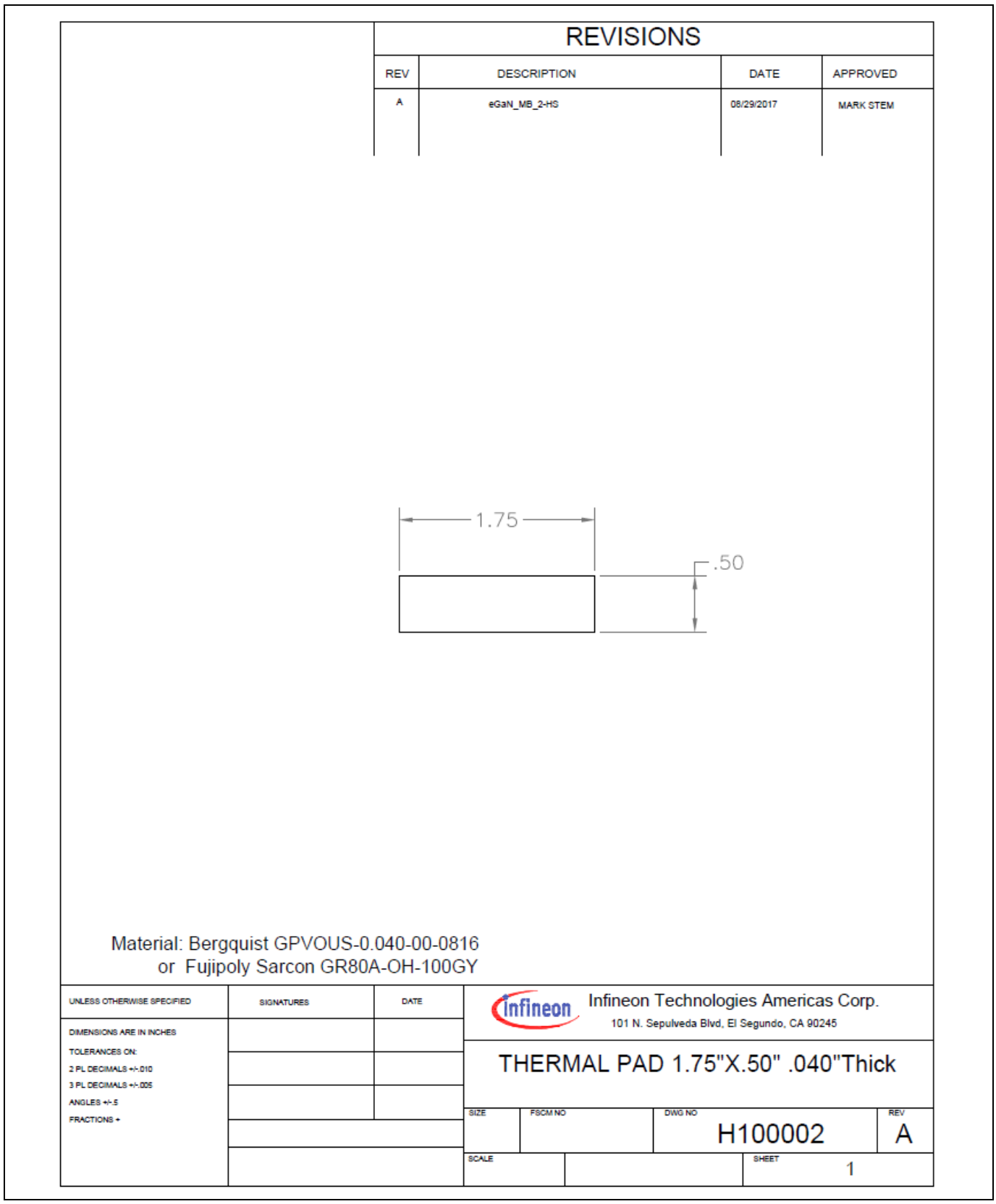

Figure 33 Secondary heatsink thermal pad

10 Line and load regulation

Table 7 Input line and load regulation table

V_{in}	**360 V DC**	**370 V DC**	**385 V DC**	**390 V DC**	**400 V DC**
I_{out}	V_{out}	V_{out}	V_{out}	V_{out}	V_{out}
0 A	52.584	52.584	52.584	52.602	52.674
7 A	52.582	52.583	52.588	52.597	52.615
14 A	52.581	52.582	52.588	52.592	52.614
34 A	52.576	52.584	52.589	52.594	52.619
41 A	52.583	52.593	52.586	52.599	52.624
55 A	52.587	52.589	52.573	52.609	52.626
68 A	52.581	52.578	52.604	52.599	52.62

11 Efficiency graphs and thermal data

11.1 Efficiency graphs

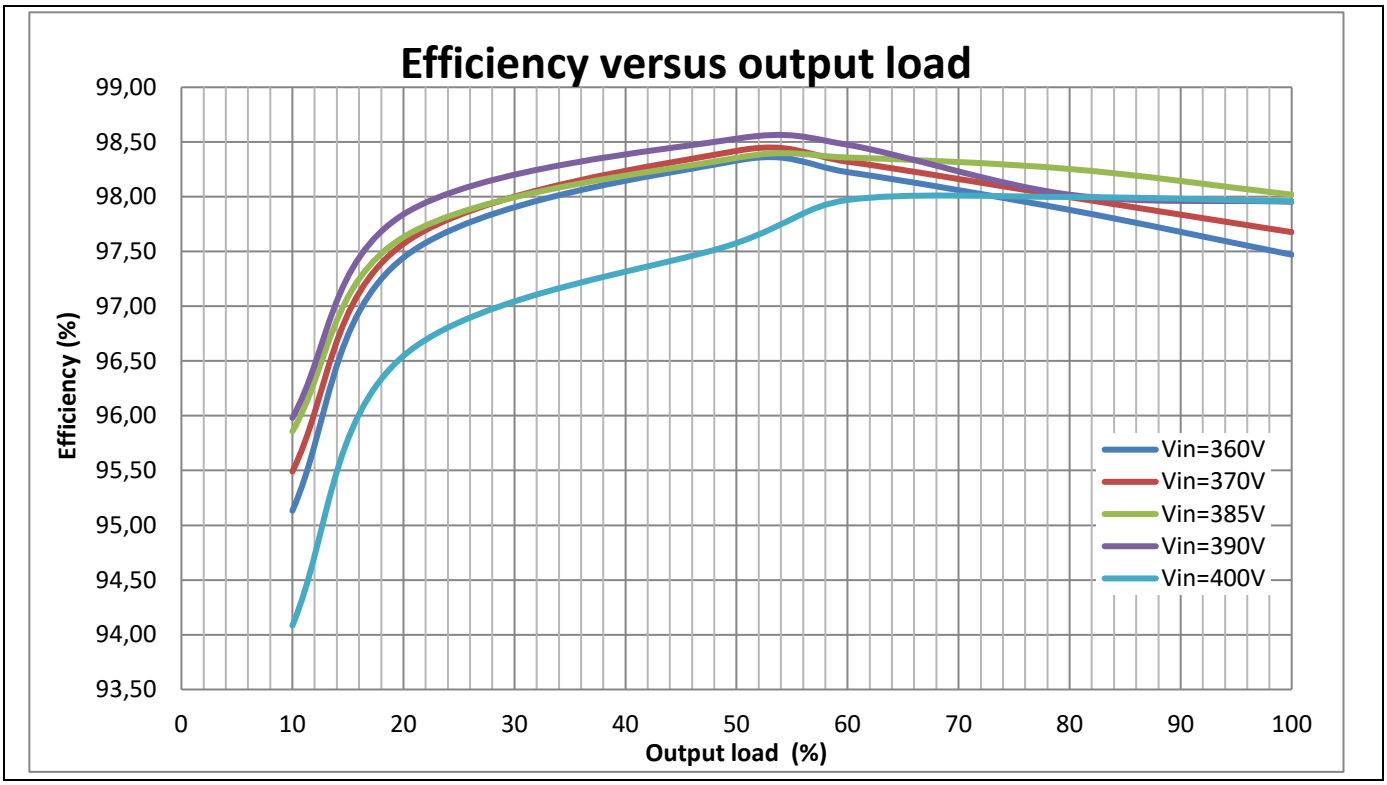

Figure 34 **Efficiency graph over line and load range**

Table 8 **Efficiency table over entire input line and output load range**

Iout	360 V DC	370 V DC	385 V DC	390 V DC	400 V DC
	Eff.	Eff.	Eff.	Eff.	Eff.
7 A	95.13	95.49	95.86	95.98	94.08
14 A	97.44	97.57	97.63	97.84	96.55
34 A	98.33	98.42	98.35	98.53	97.58
41 A	98.22	98.32	98.36	98.47	97.97
55 A	97.88	98.00	98.25	98.02	98.00
69 A	97.47	97.68	98.02	97.95	97.96

$$Efficiency\ (\eta) = \frac{V_{out} * I_{out}}{(V_{in} * I_{in)-13W}} \text{ x } 100$$

Note: *13.1 W represents the bias and fan power internal losses.*

11.2 Thermal measurements

Power supply component map

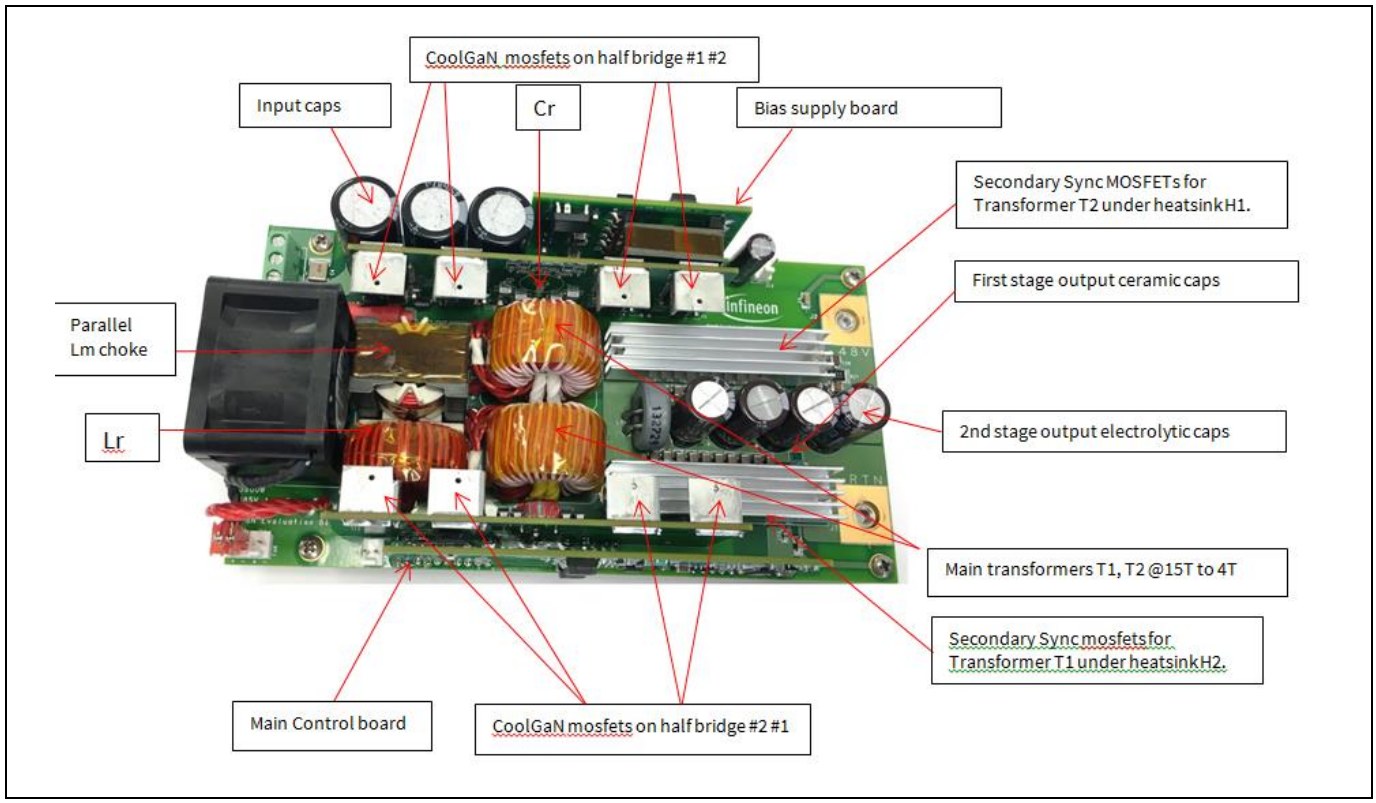

Figure 35 Power supply component map

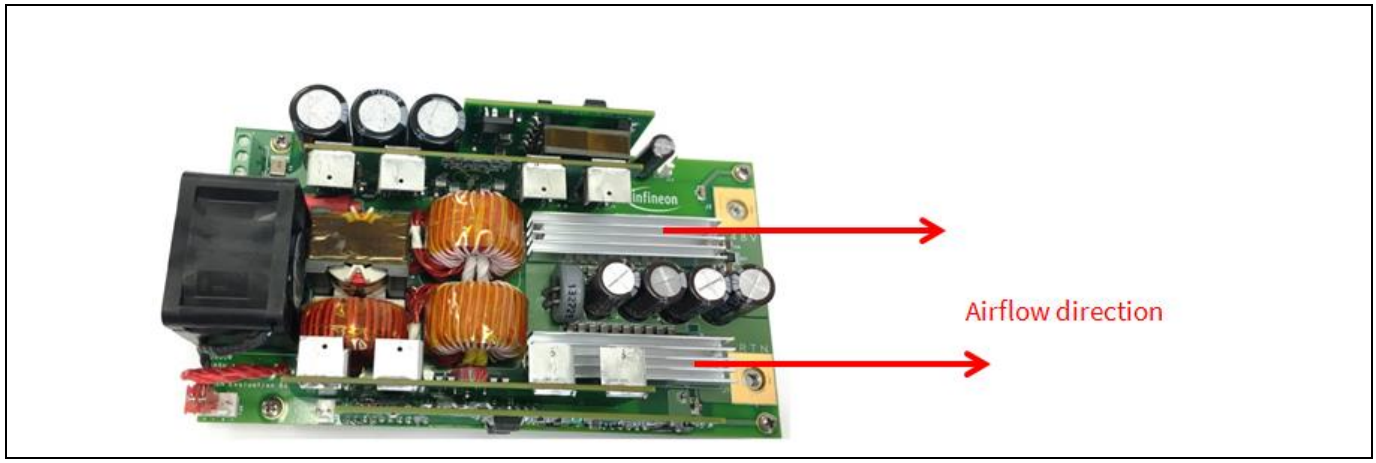

Figure 36 Airflow direction

11.3 Thermal image results at V_{in} = 385 V at full load

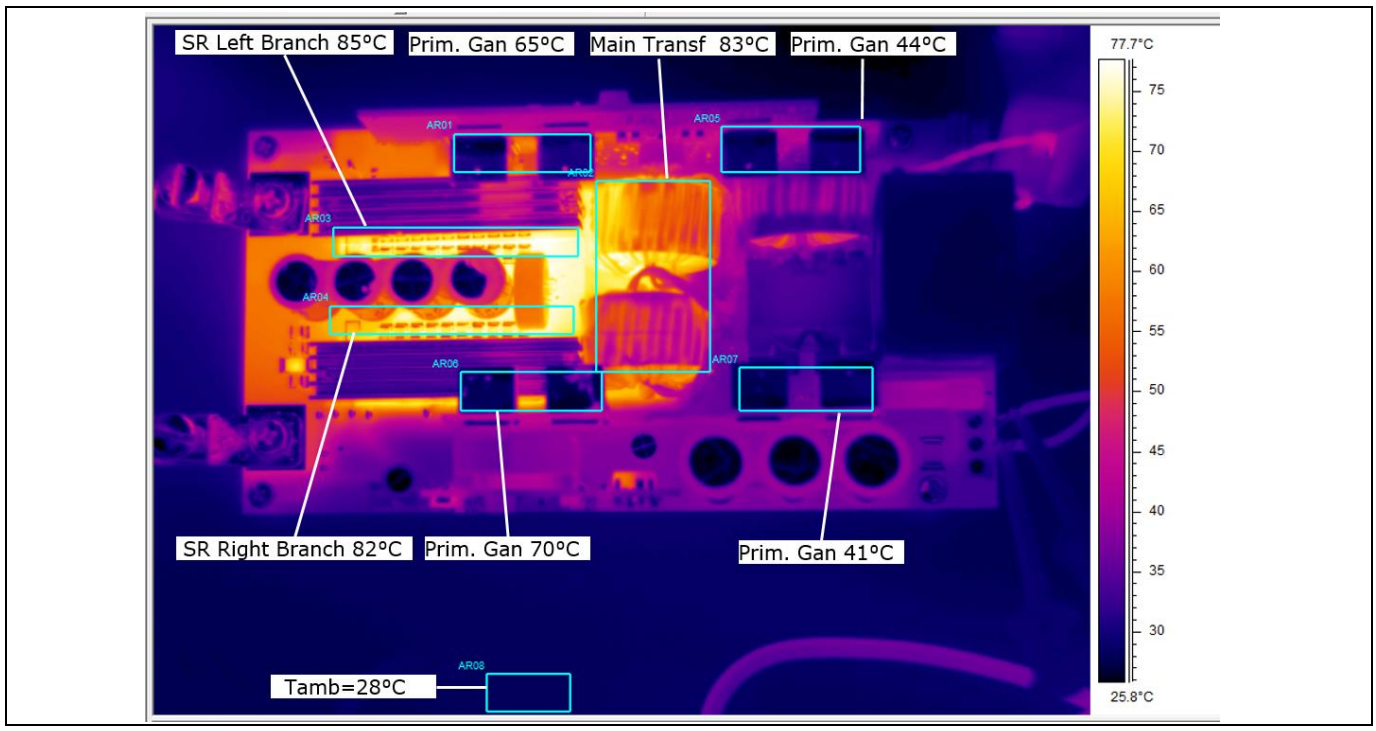

Figure 37 Thermal image results at V_{in} = 385 V at full load

11.4 Thermal image results at V_{in} = 360 V at full load

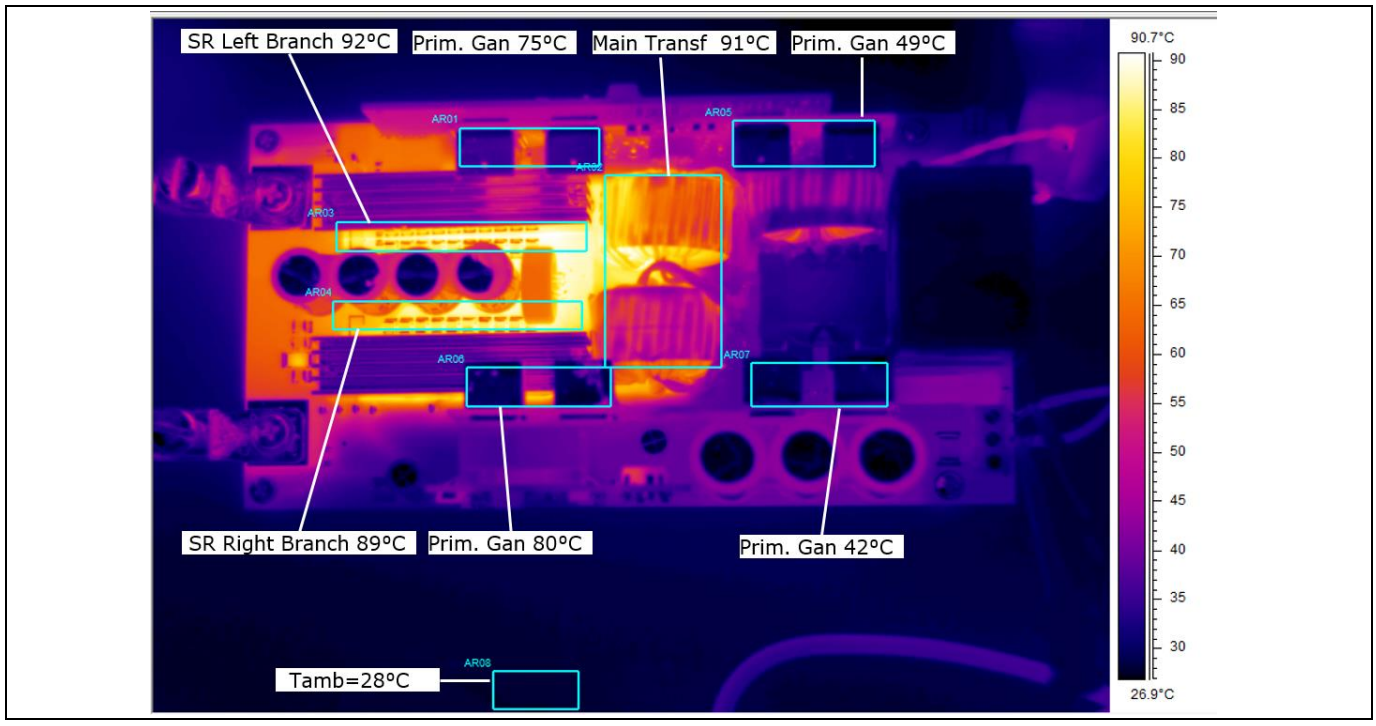

Figure 38 Thermal image results at V_{in} = 360 V at full load

11.5 Thermal image results at V_{in} = 400 V at full load

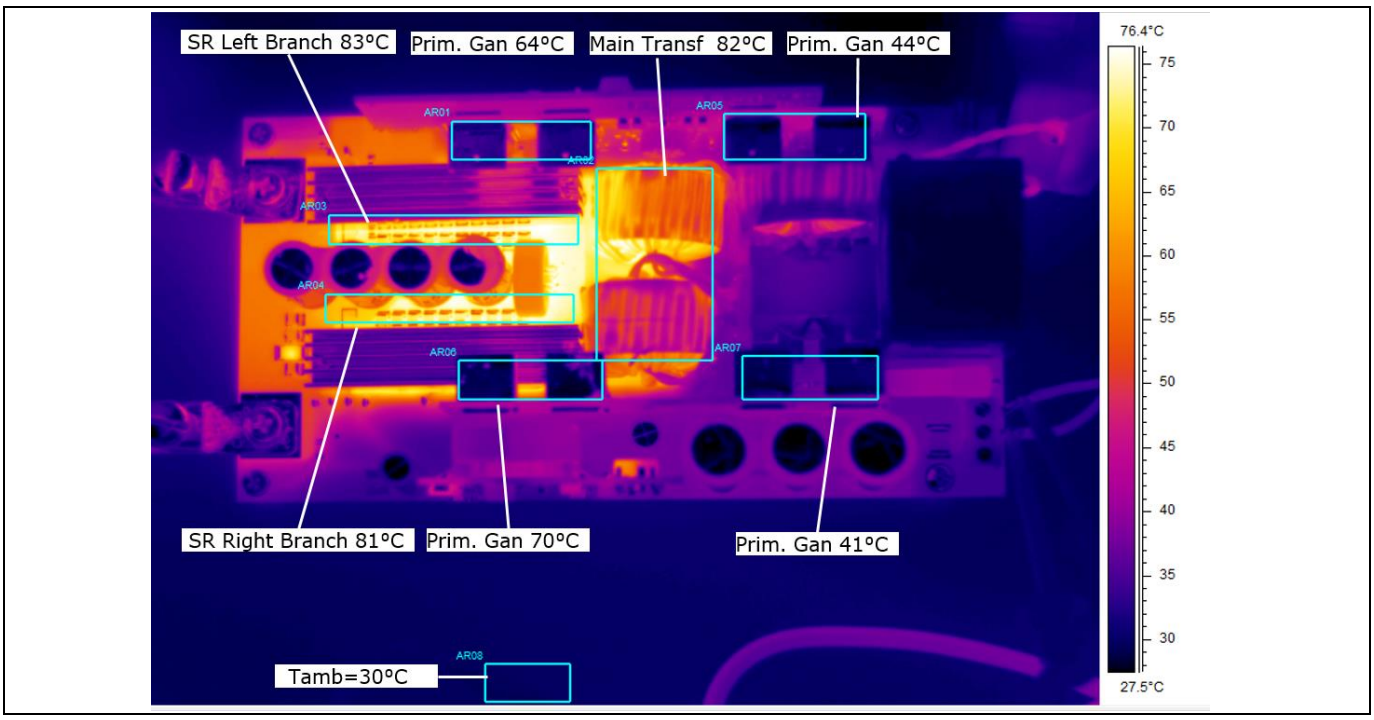

Figure 39 Thermal image results at V_{in} = 400 V at full load

12 Waveforms

Refer to the schematics on Figure 11 for primary-side devices and Figure 14 for secondary-side devices used in the waveforms. The input voltage is 380 V to 385 V, switching frequency is 300 kHz to 350 kHz and output voltage is 52 V using IGT60R070G1 CoolGaN™ 600 V 70 mΩ MOSFETs.

12.1 Switching waveforms at 0 percent load

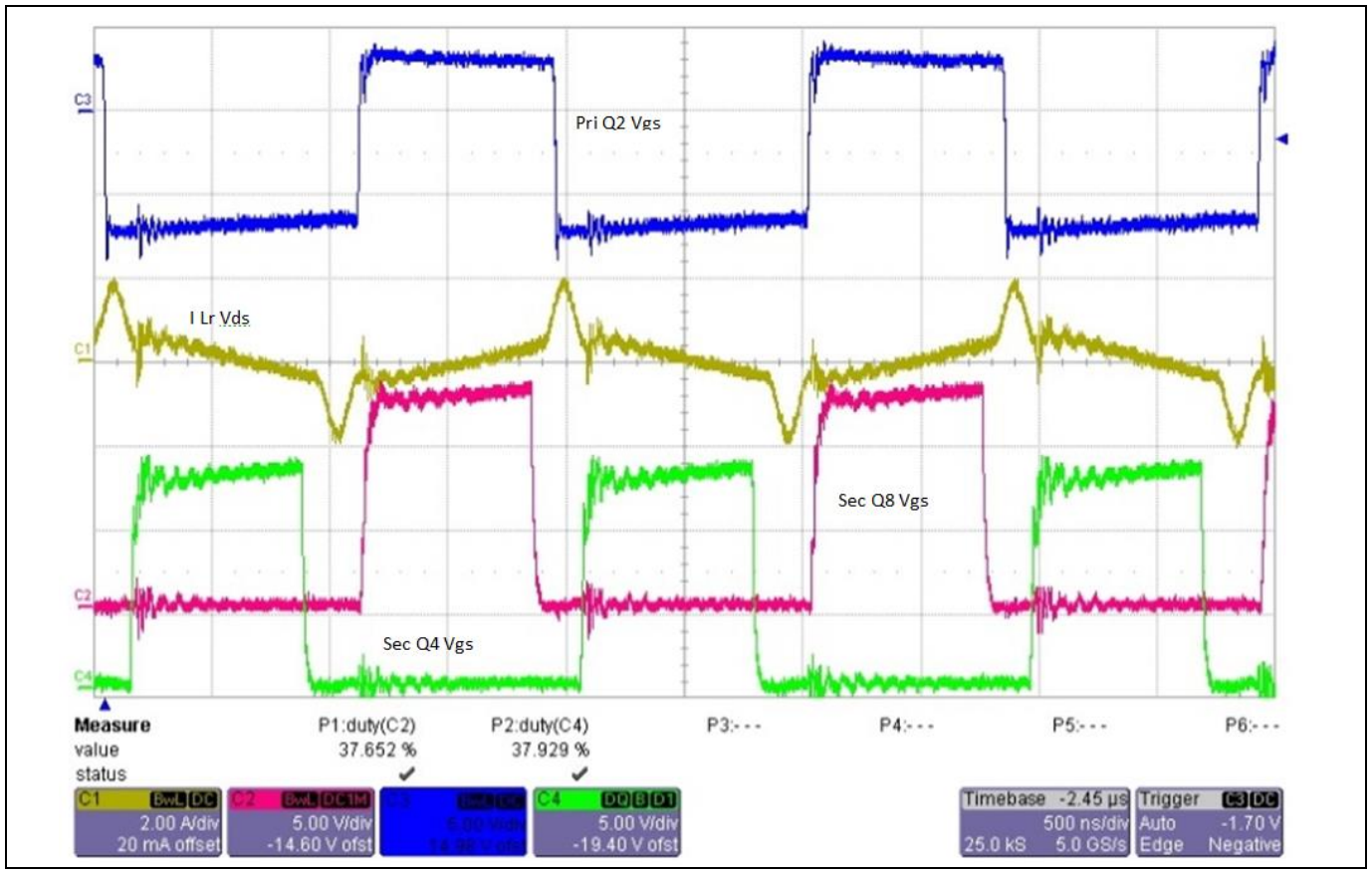

Figure 40 0 percent load. Primary gate source (V_{gs}) and drain source (V_{ds}) waveforms of Q2 and Q8. Full ZVS for Q2 can be observed in V_{ds} (green).

12.2 Switching waveforms at 0 percent load expanded view

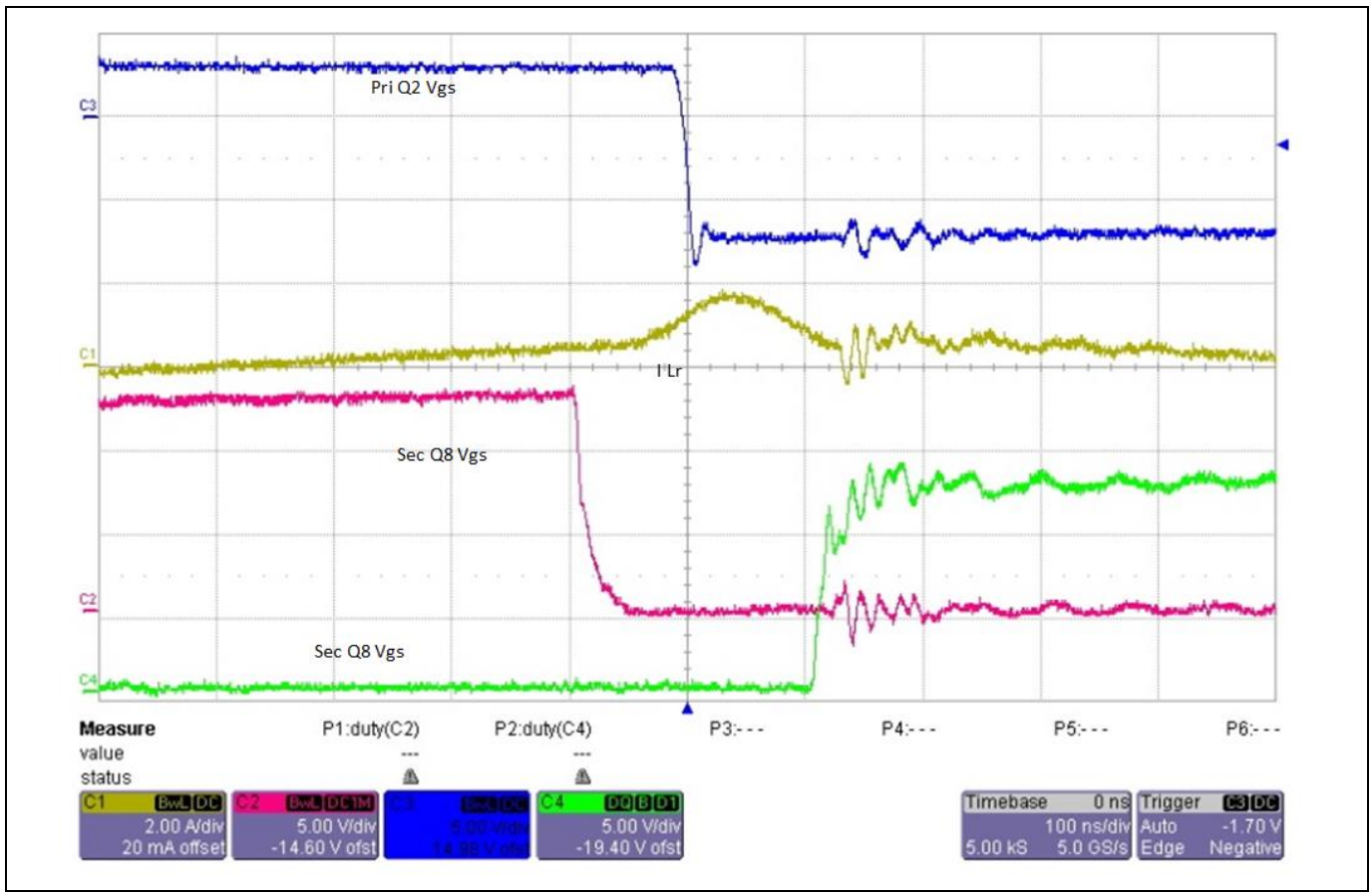

Figure 41 **0 percent load.Primary gate source (V_{gs}) waveforms of Q8 and secondary gates at 100 ns/div expanded view**

12.3 Switching waveforms at 10 percent load

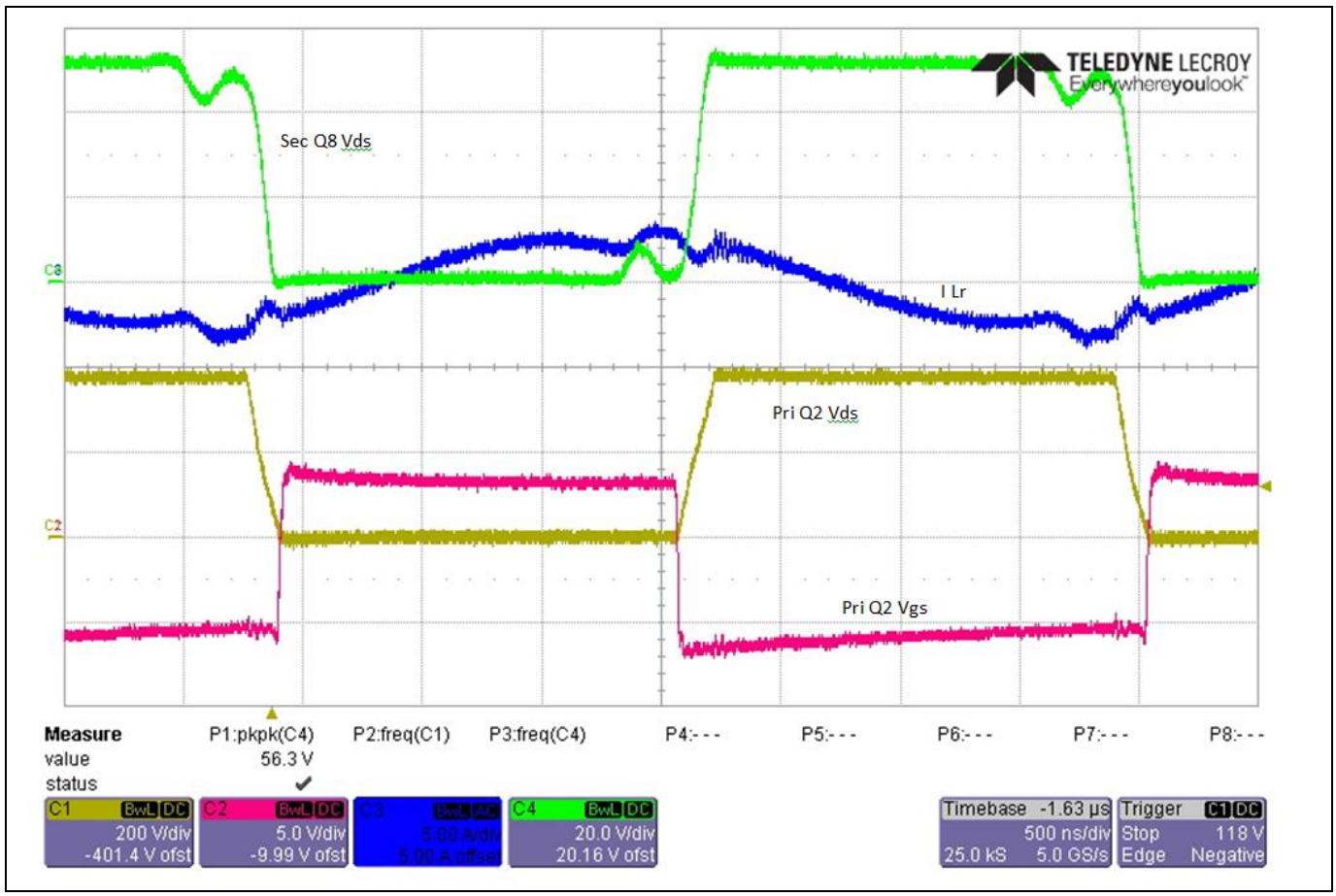

Figure 42 **10 percent load. Primary gate source (V_{gs}) and drain source (V_{ds}) waveforms of Q2. Full ZVS for Q2 can be observed in V_{ds} (yellow)**

12.4 Switching waveforms at 10 percent load expanded view

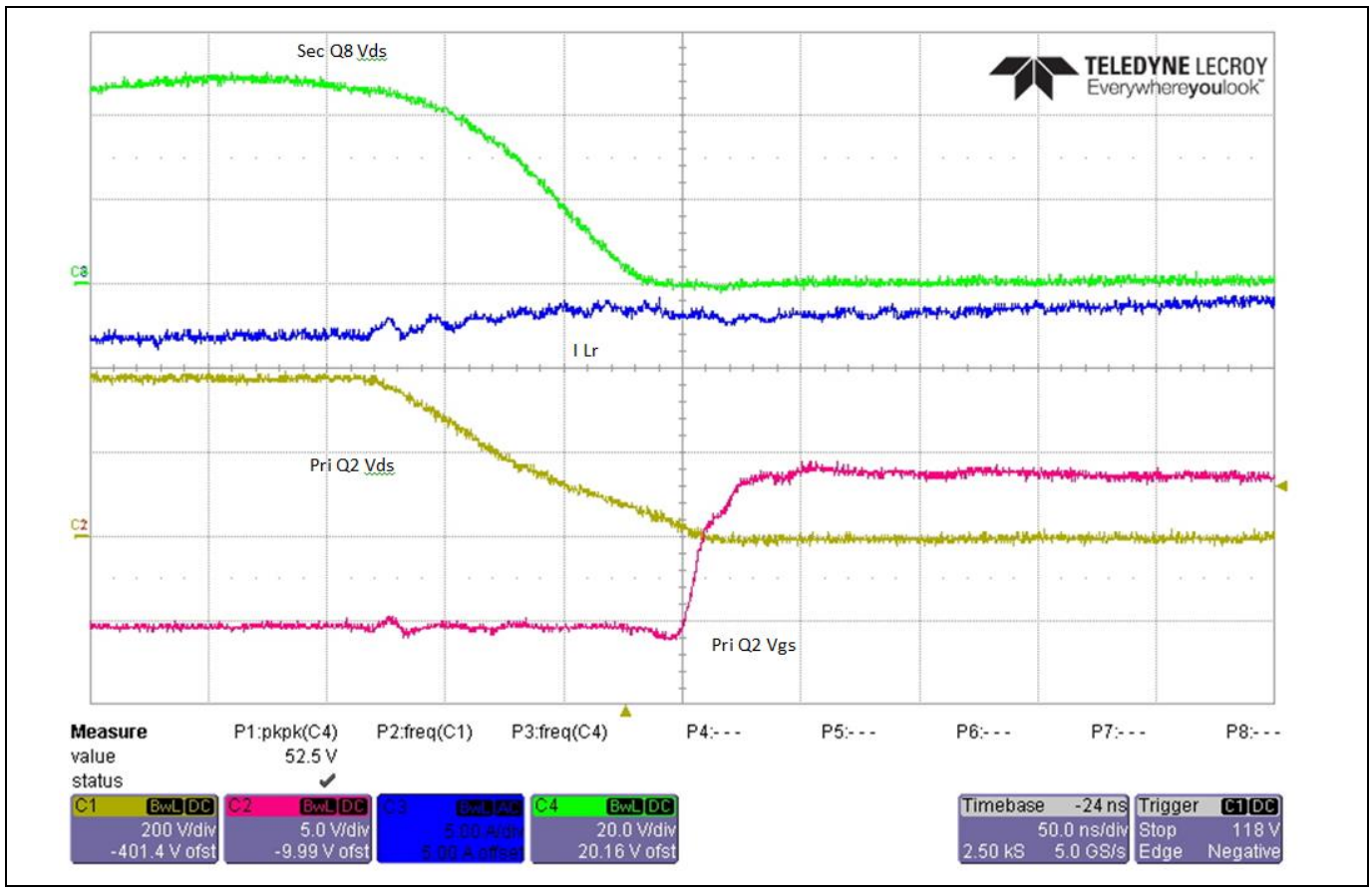

Figure 43 **10 percent load. Primary gate source (V_{gs}) and drain source (V_{ds}) waveforms of Q2. Full ZVS for Q2 can be observed in V_{ds} (yellow) at 100 ns/div expanded view**

12.5 Switching waveforms at 20 percent load

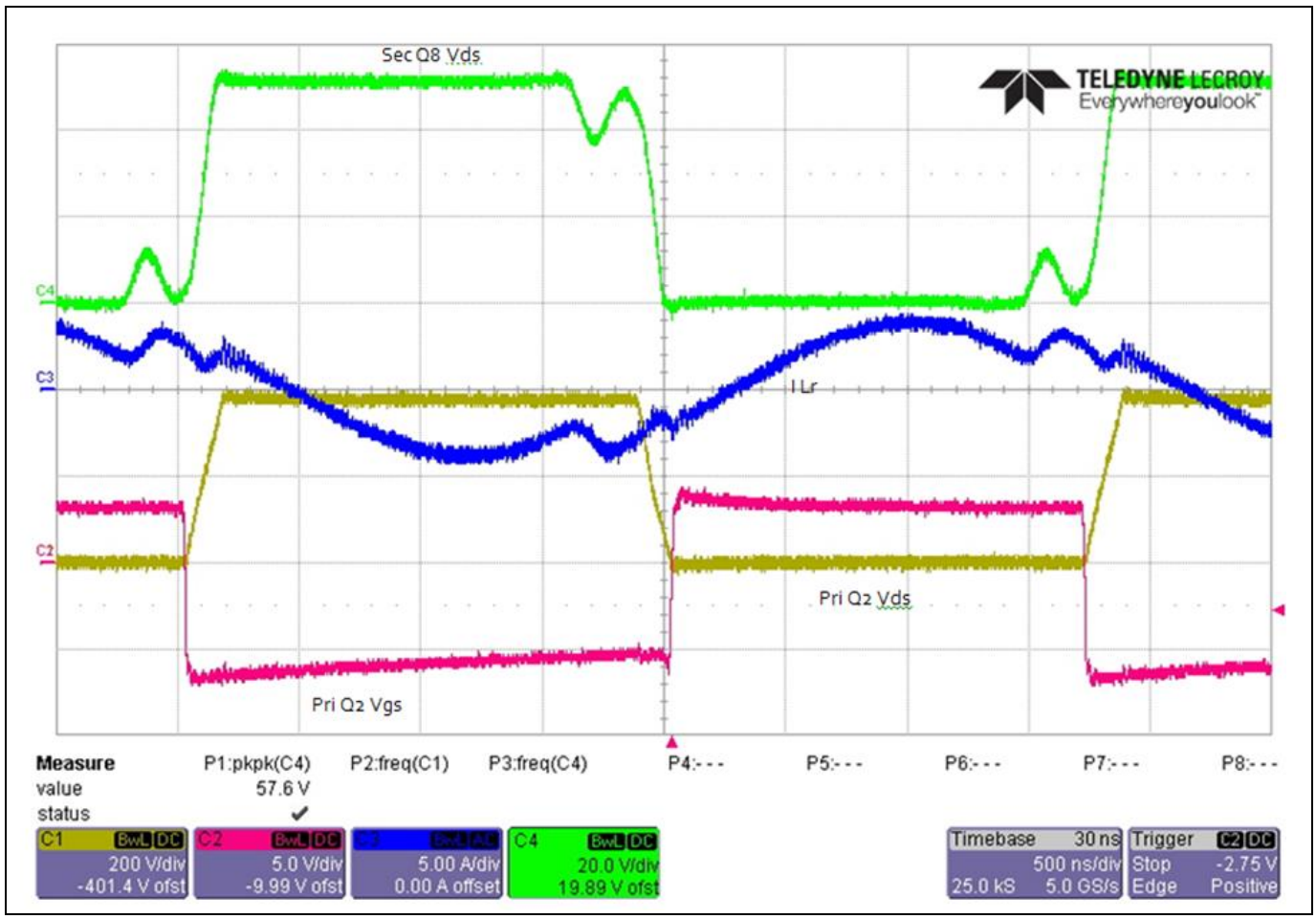

Figure 44 **20 percent load. Primary gate source (V_{gs}) and drain source (V_{ds}) waveforms of Q2. Full ZVS for Q2 can be observed in V_{ds} (yellow). The secondary synchronous FETs are in full ZVS as well**

12.6 Switching waveforms at 20 percent load expanded view

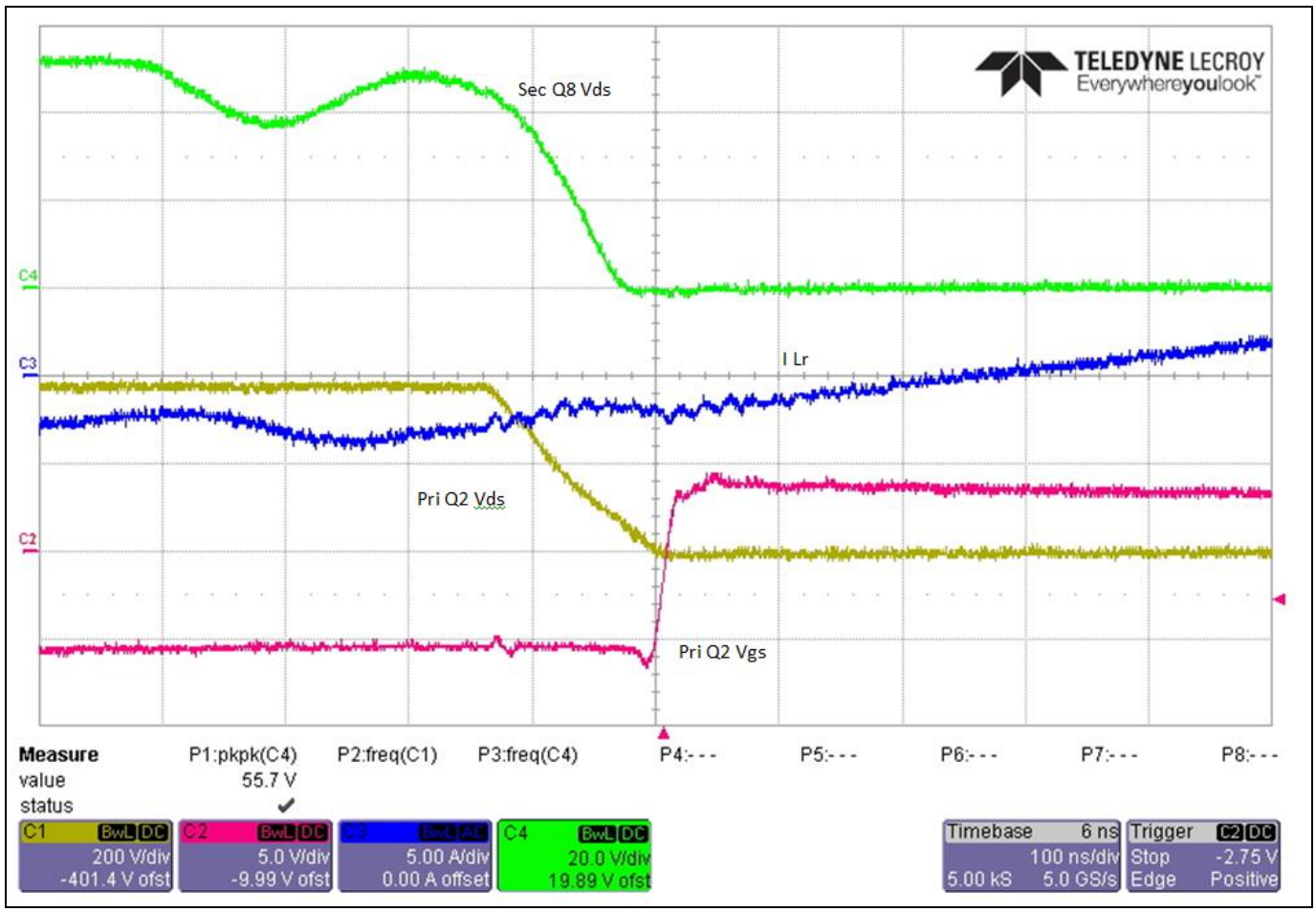

Figure 45 **20 percent load. Primary gate source (V_{gs}) and drain source (V_{ds}) waveform of Q2. Full ZVS for Q2 can be observed in V_{ds} (yellow) at 100 ns/div expanded view**

12.7 Switching waveforms at 50 percent load

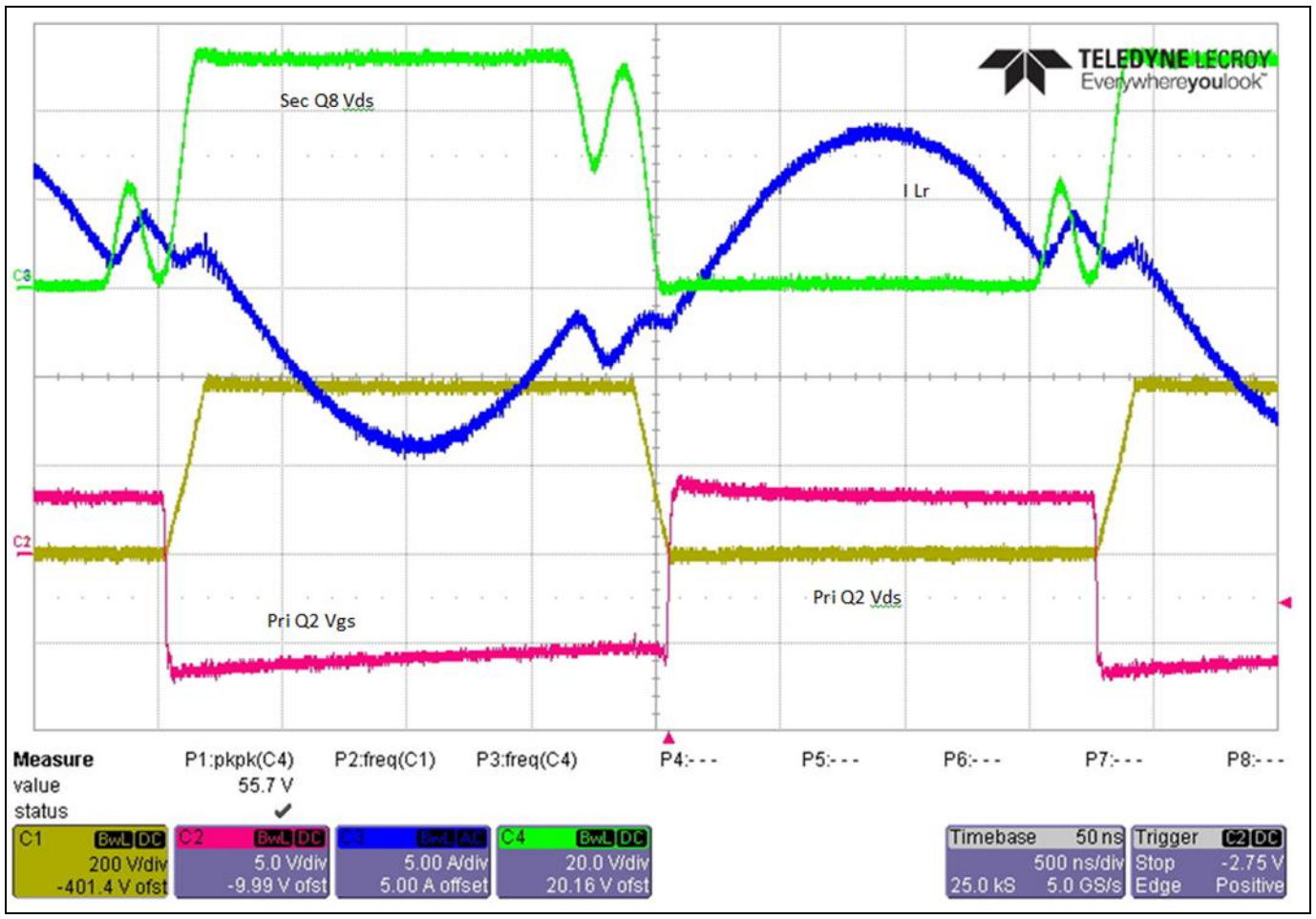

Figure 46 **50 percent load. Primary gate source (Vgs) and drain source (Vds) waveforms of Q2. Full ZVS for Q2 can be observed**

12.8 Switching waveforms at 50 percent load expanded view

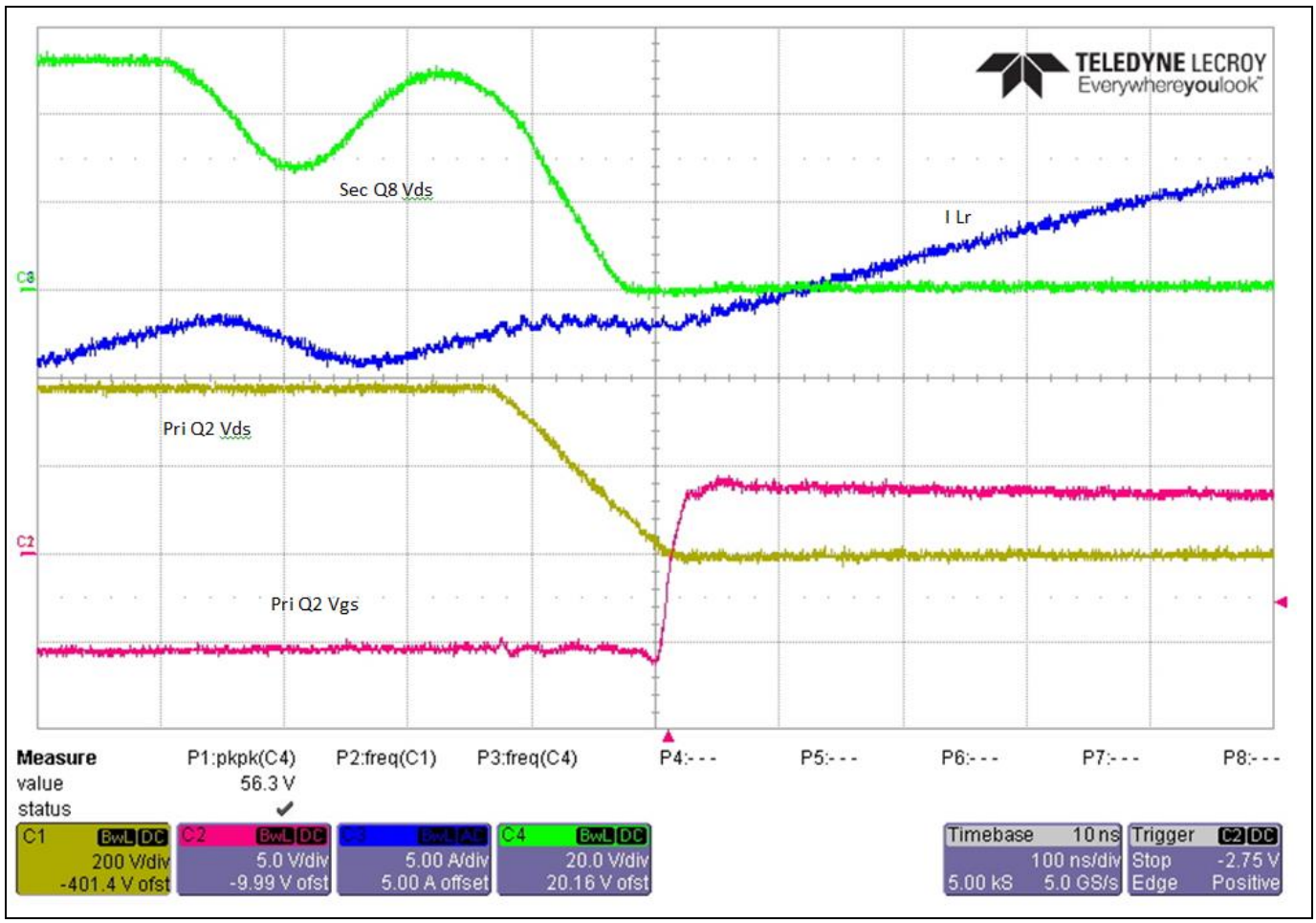

Figure 47 **50 percent load. Primary gate source (Vgs) and drain source (Vds) waveforms of Q2. Full ZVS can be observed at 50 percent load at 100 ns/div expanded view**

12.9 Switching waveforms at 100 percent load

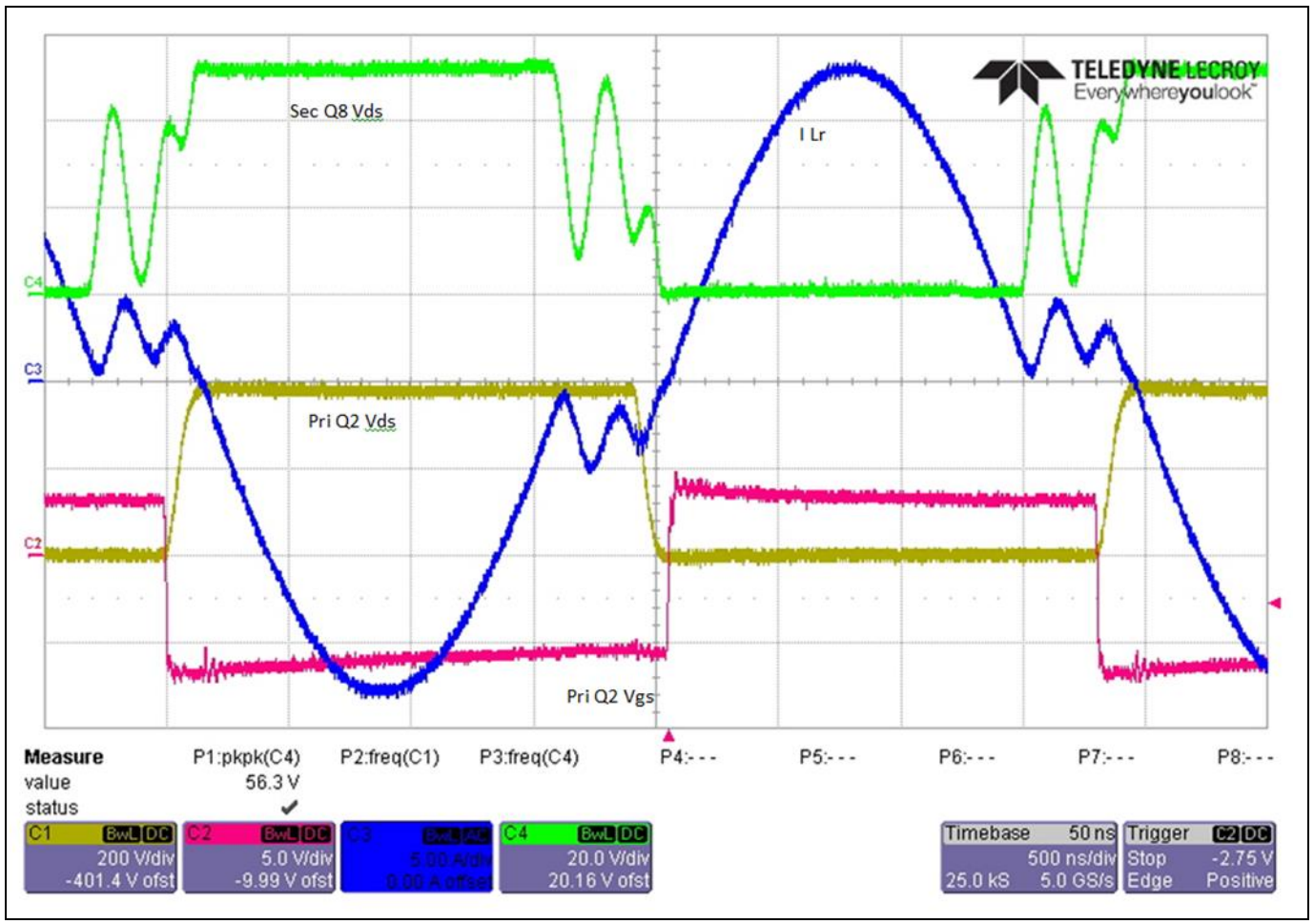

Figure 48 **100 percent load. Primary gate source (Vgs) and drain source (Vds) waveform of Q2. Full ZVS can be observed at 100 percent load, i.e. Vds is zero when the Vgs is equal to or less than 0 V**

12.10 Switching waveforms at 100 percent load expanded view

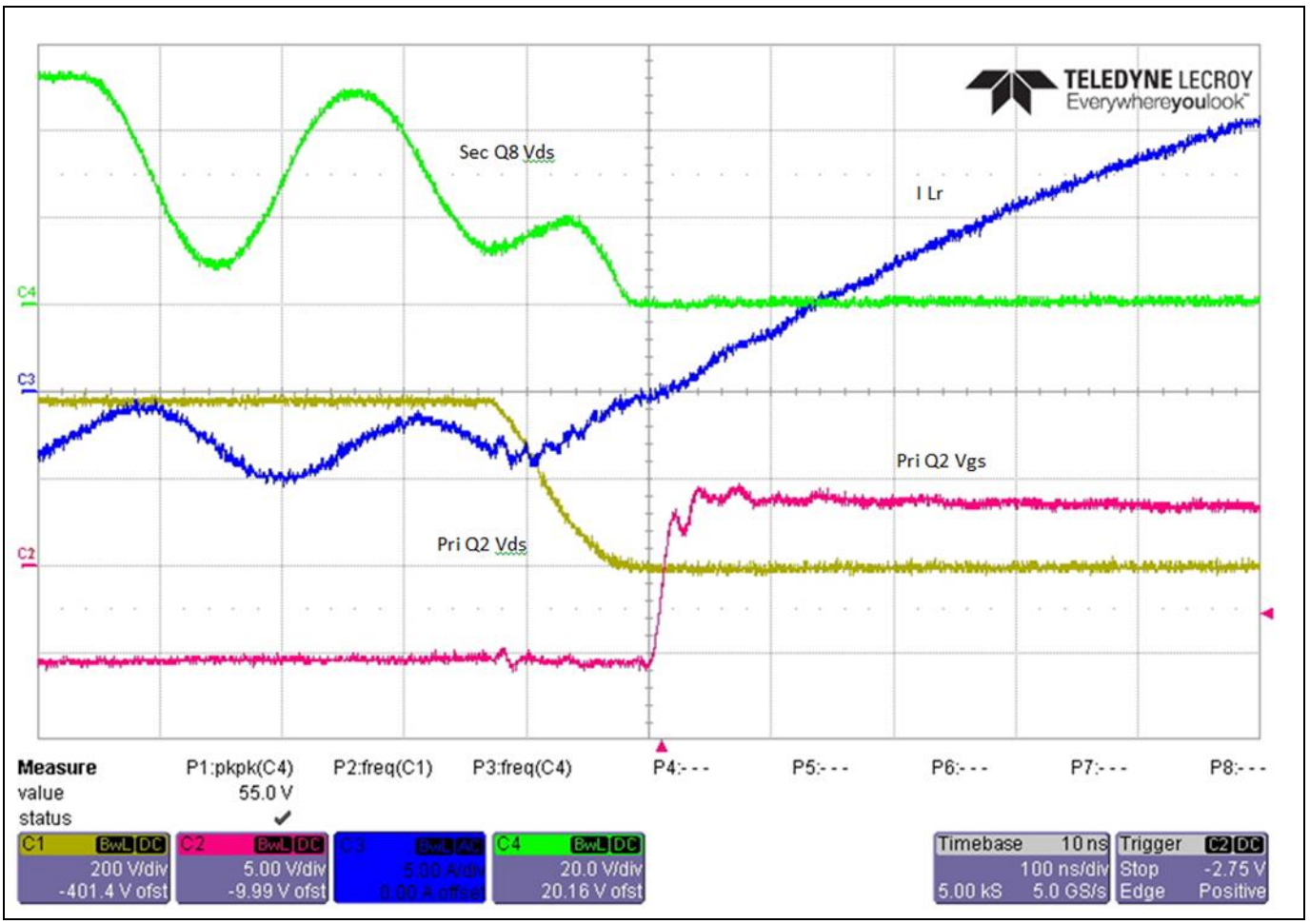

Figure 49 **100 percent load. Primary gate source (Vgs) and drain source (Vds) waveform of Q2. Full ZVS for Q2 can be observed in Vds (yellow) at 100 ns/div expanded view**

12.11 Current limit switching waveforms

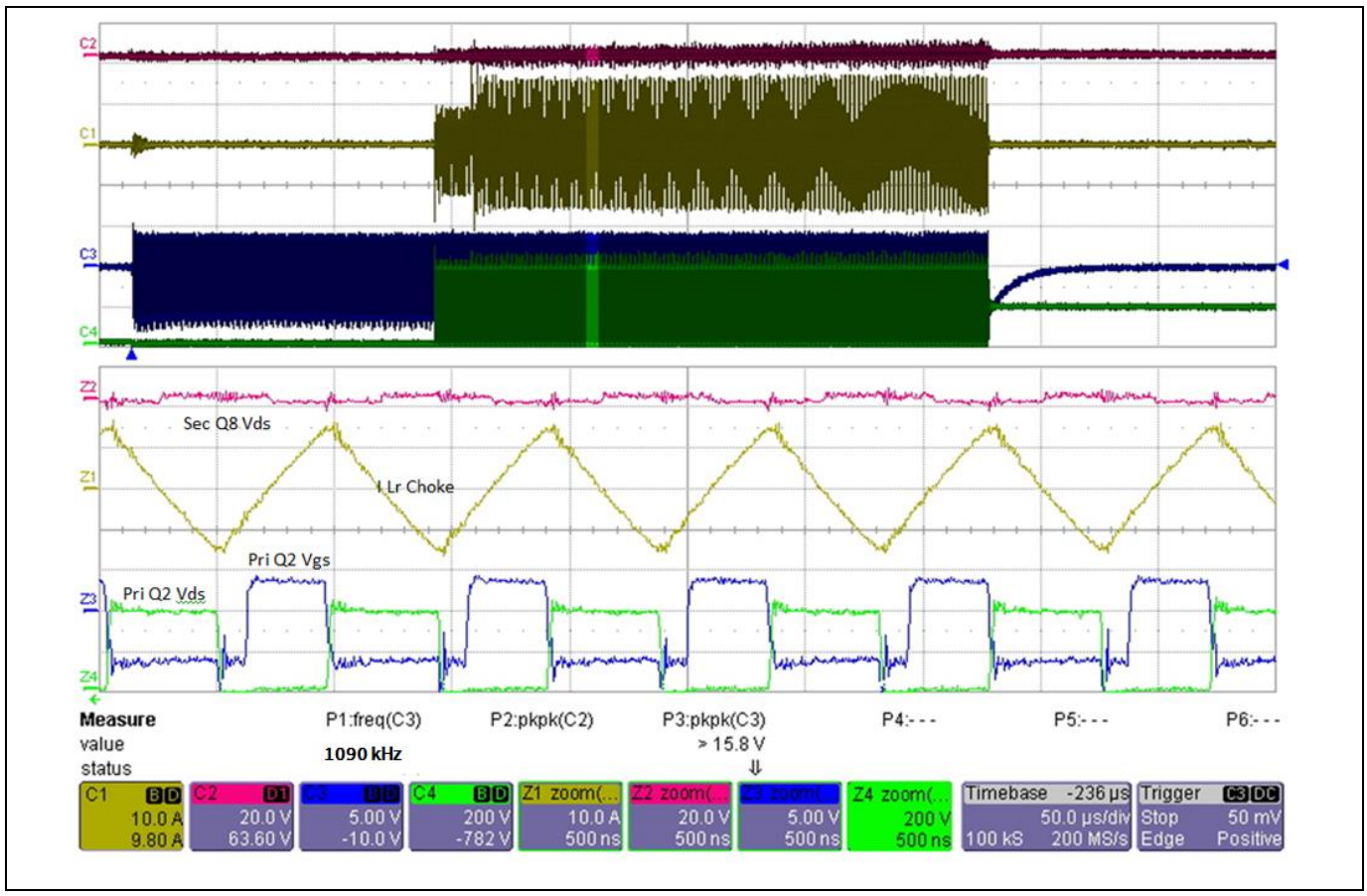

Figure 50 **During output overload of primary gate source (V_{gs}) and drain source (V_{ds}) waveforms of FETs Q2. During current limit conditions it is noted that the CoolGaN™ MOSFETs easily operate at or above 1 MHz operation**

12.12 Waveforms during output overload shutdown

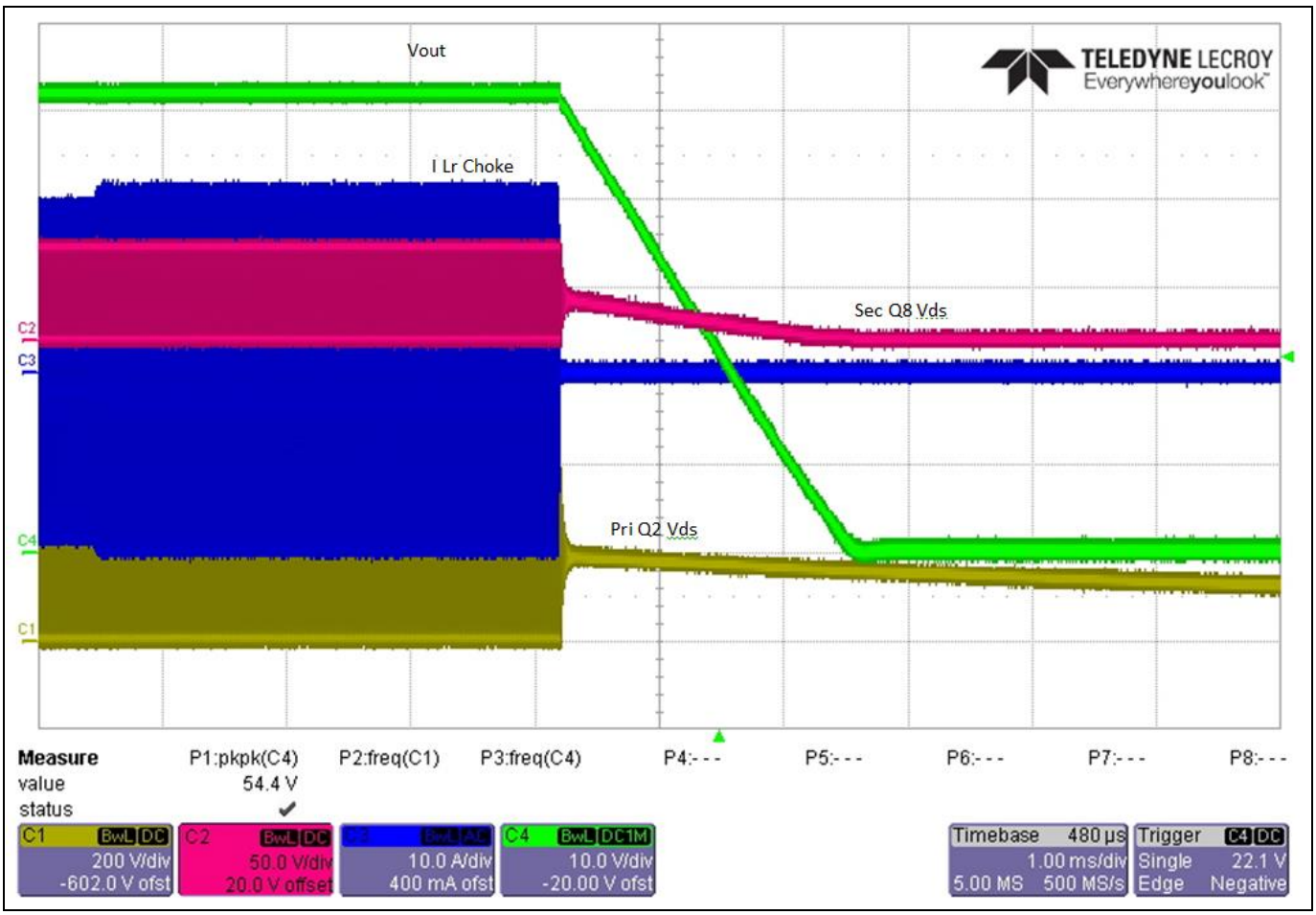

Figure 51 Waveforms during output over-load shut-down

12.13 Output transients from 10 percent to 50 percent load step change

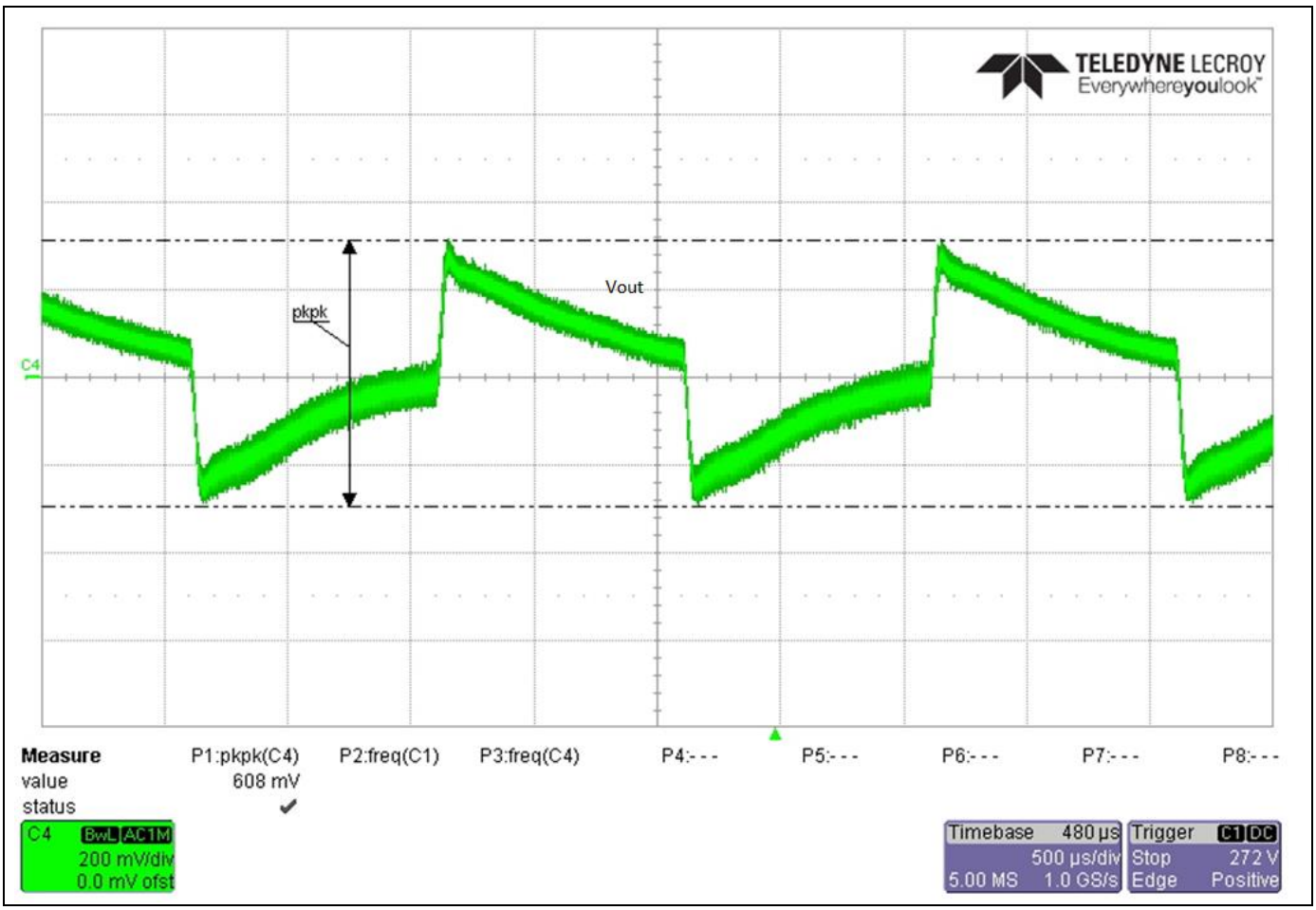

Figure 52 **Output voltage (V_{out}) at load (I_{out}) step-change from 10 percent to 50 percent, 7 A to 34 A at 385 V DC input**

12.14 Output transient from 50 percent to 100 percent load step change

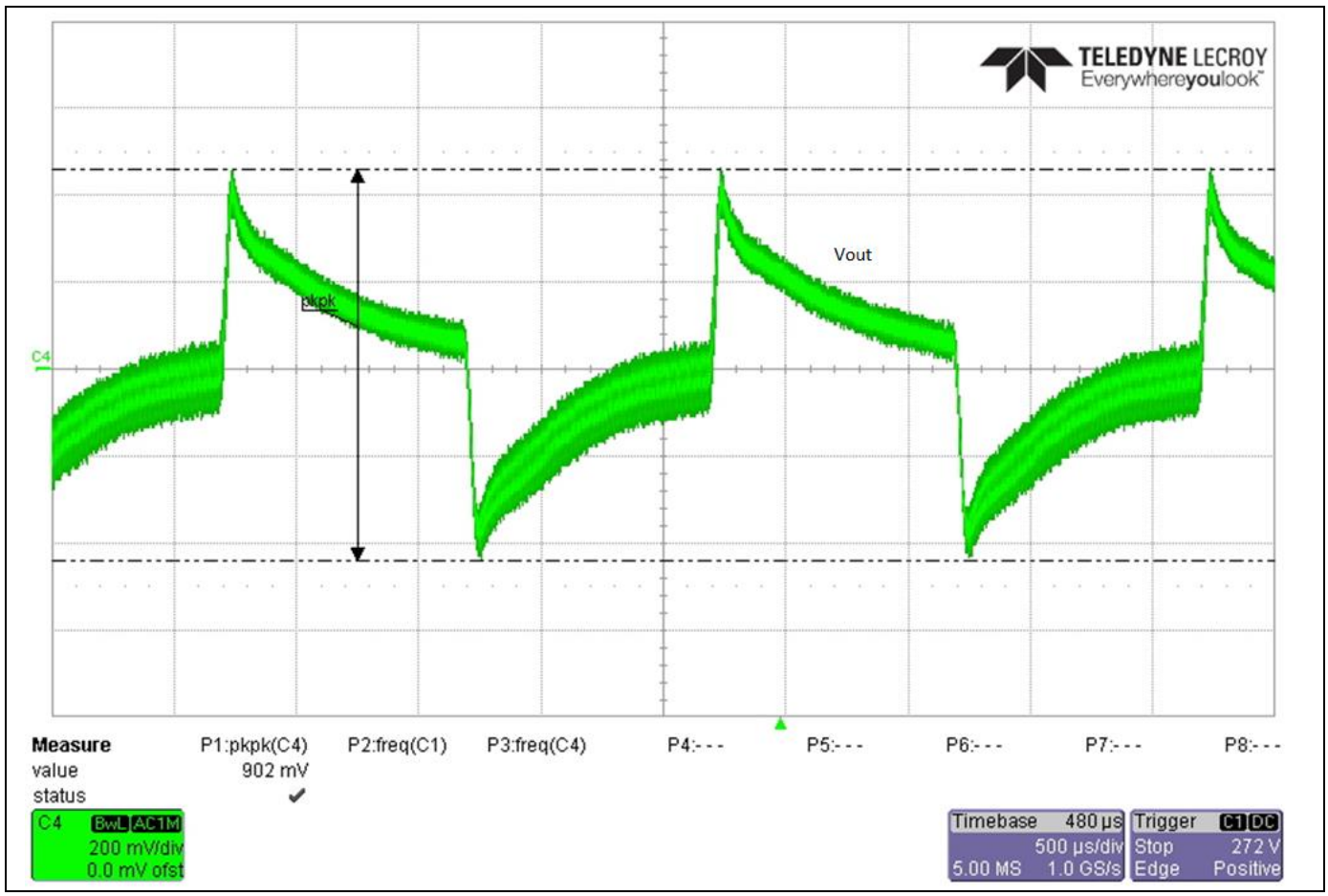

Figure 53 **Output voltage (V_{out}) at load (I_{out}) step-change from 50 percent to 100 percent, 34 A to 69 A at 385 V DC input**

12.15 Output rise time at V_{in} = 385 V with 52 V at no load

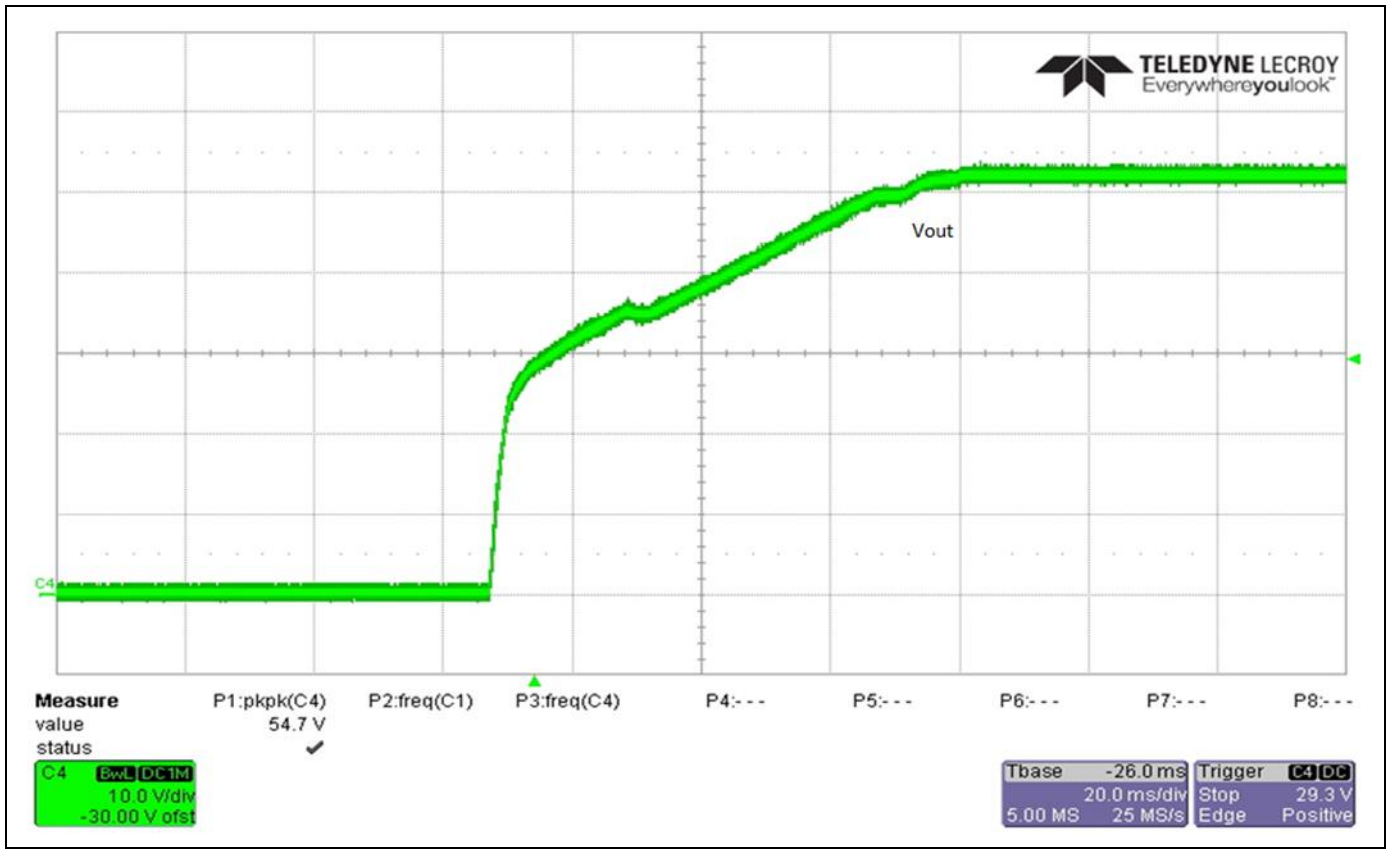

Figure 54 Rise time at 0 A load = 75 ms

12.16 Output fall time at V_{in} = 385 V with 52 V at no load

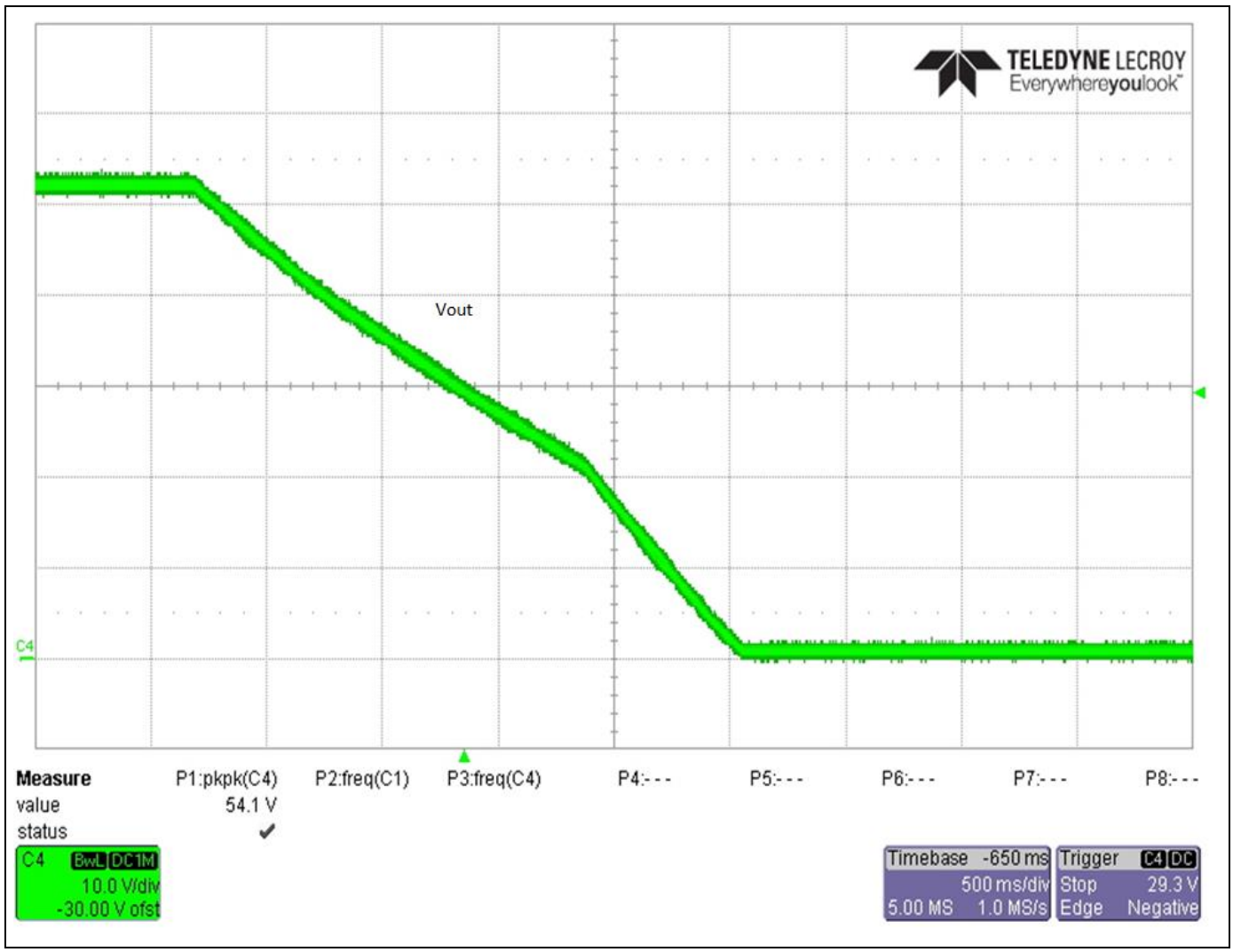

Figure 55 Fall time at 0 A load is about 2.25 seconds

12.17 Output rise time at V_{in} = 360 V DC with 52 V DC at 68 A load

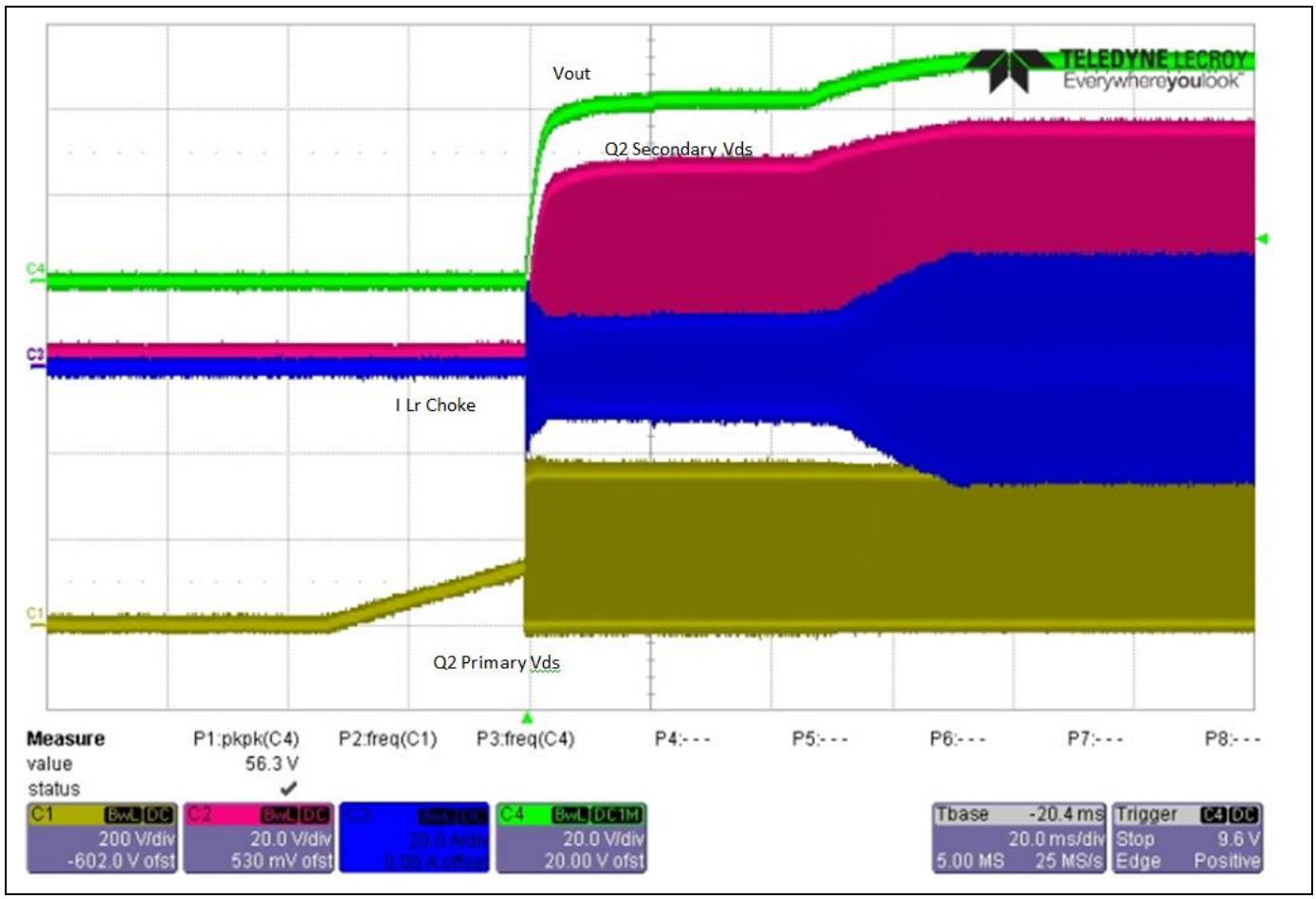

Figure 56 Rise time at 360 V DC with 68 A on output = 75 ms

12.18 Output rise time at V_{in} = 400 V DC with 52 V DC at 68 A load

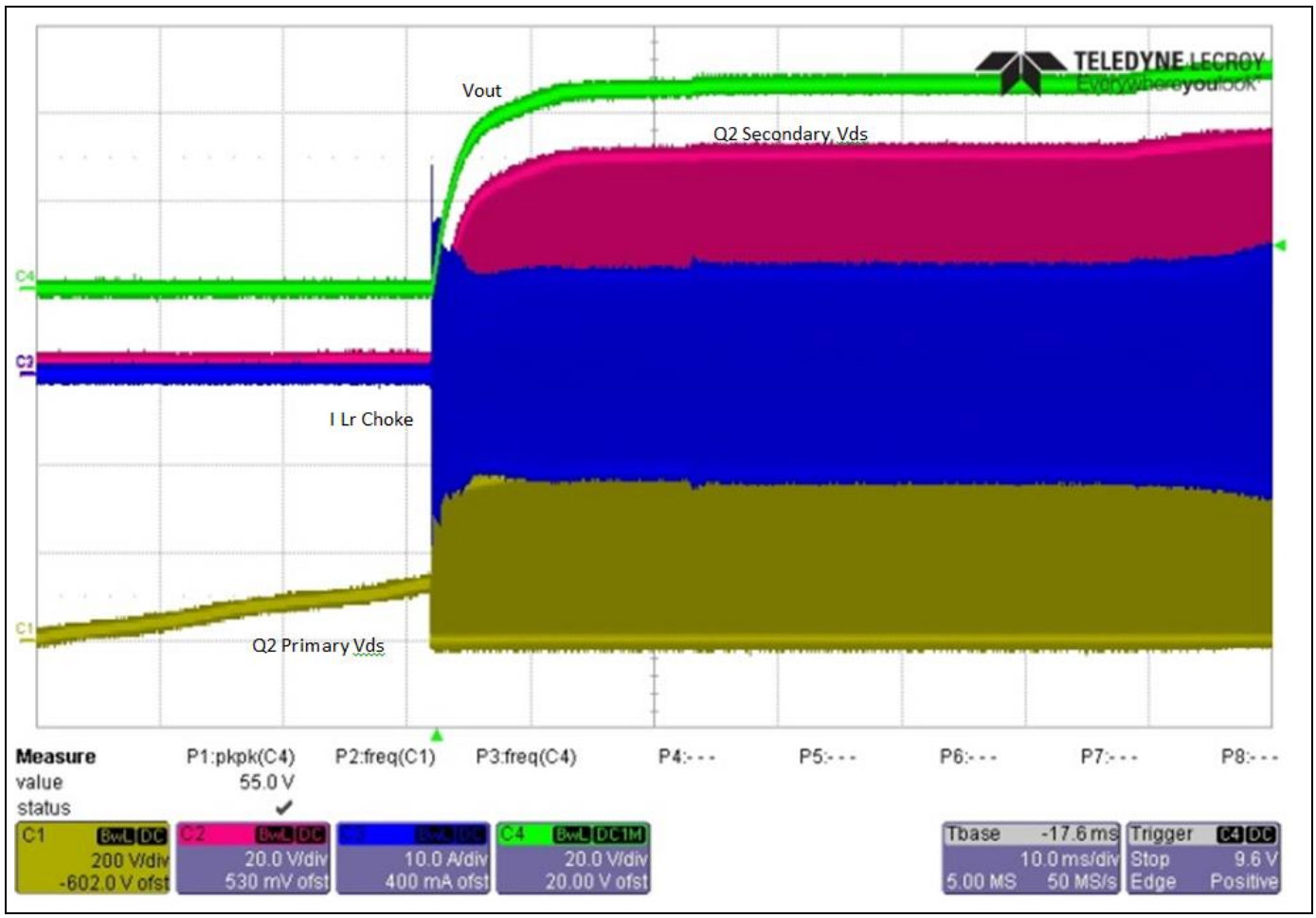

Figure 57 Rise time at 400 V DC with 68 A on output = 75 ms

12.19 Output fall time at V_{in} = 360 V DC with 52 V DC at 68 A load

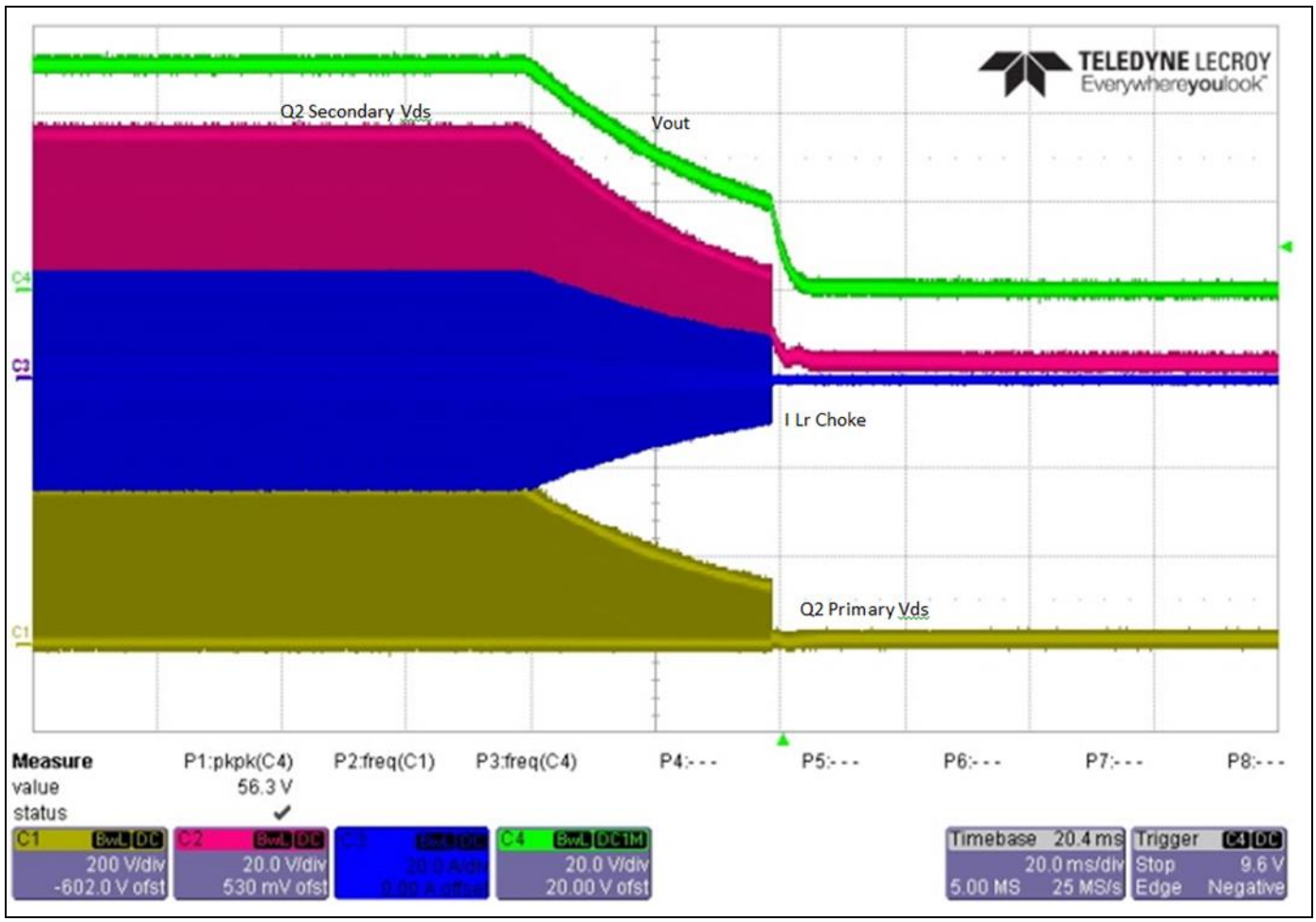

Figure 58 Fall time at 360 V DC with 68 A on output

12.20 Output fall time at V_{in} = 400 V DC with 52 V DC at 68 A load

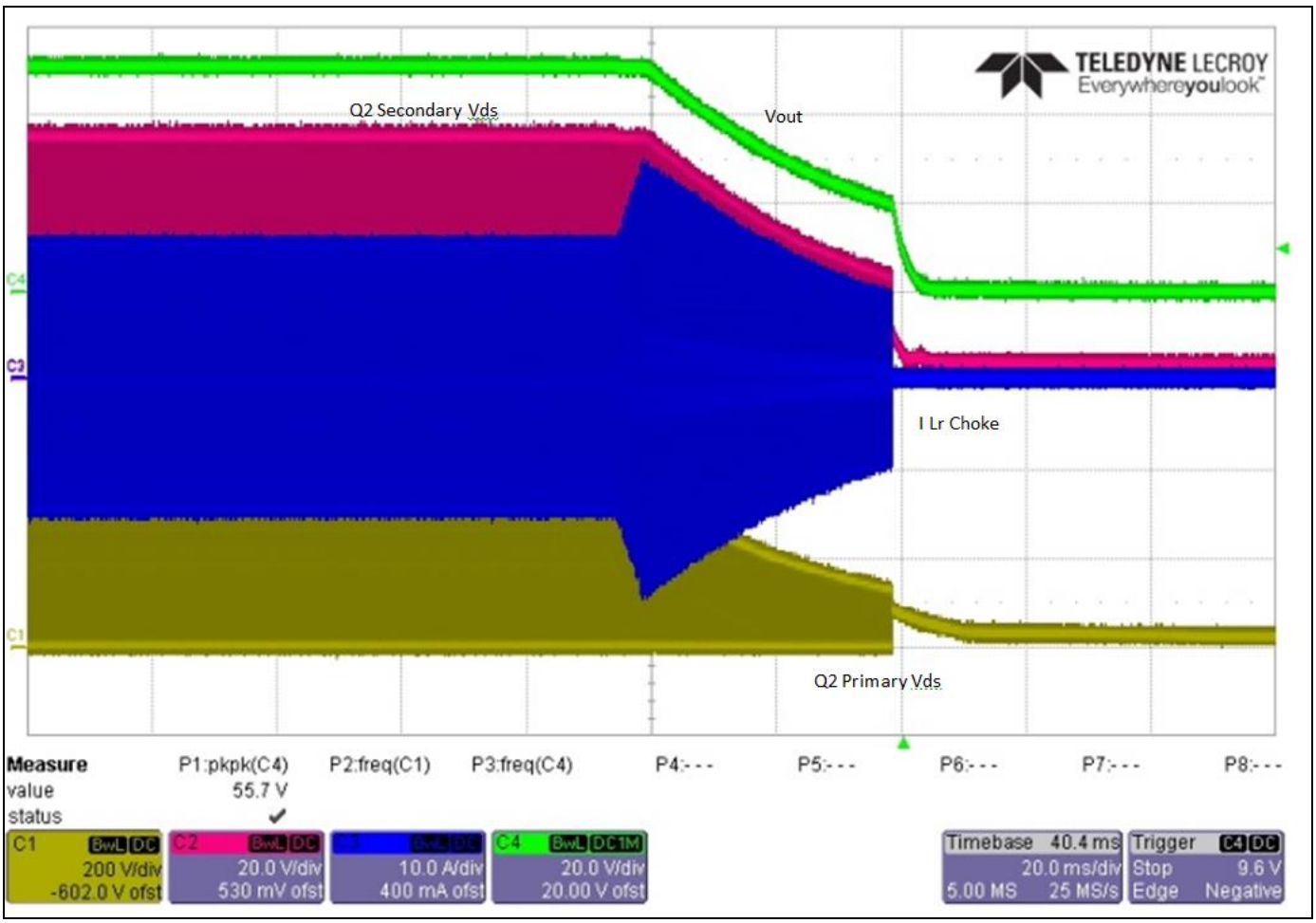

Figure 59 Fall time at 400 V DC with 68 A on output

12.21 Output PARD at 0 percent load

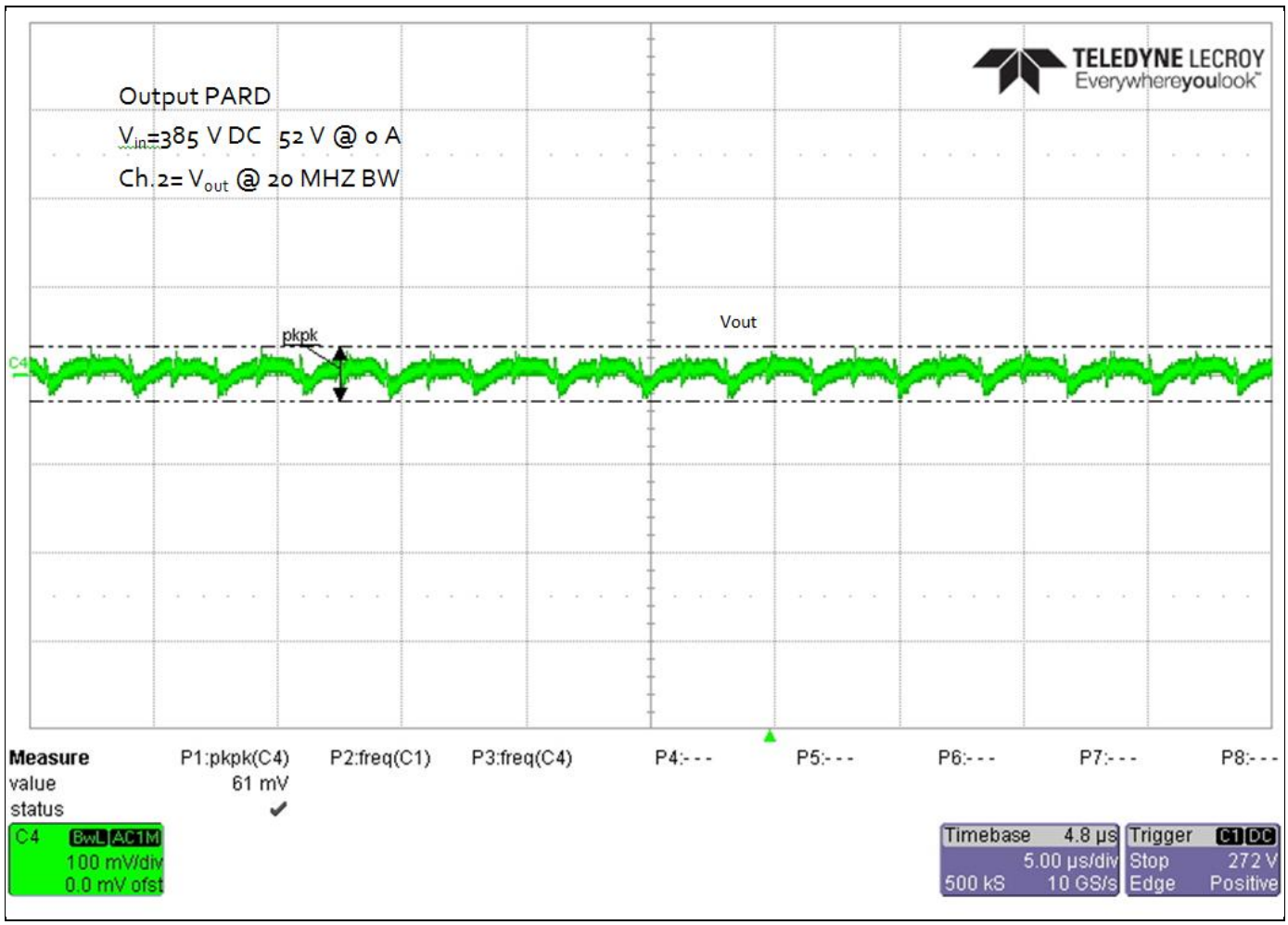

Figure 60 Output PARD at 0 percent load

12.22 Output PARD at 50 percent load

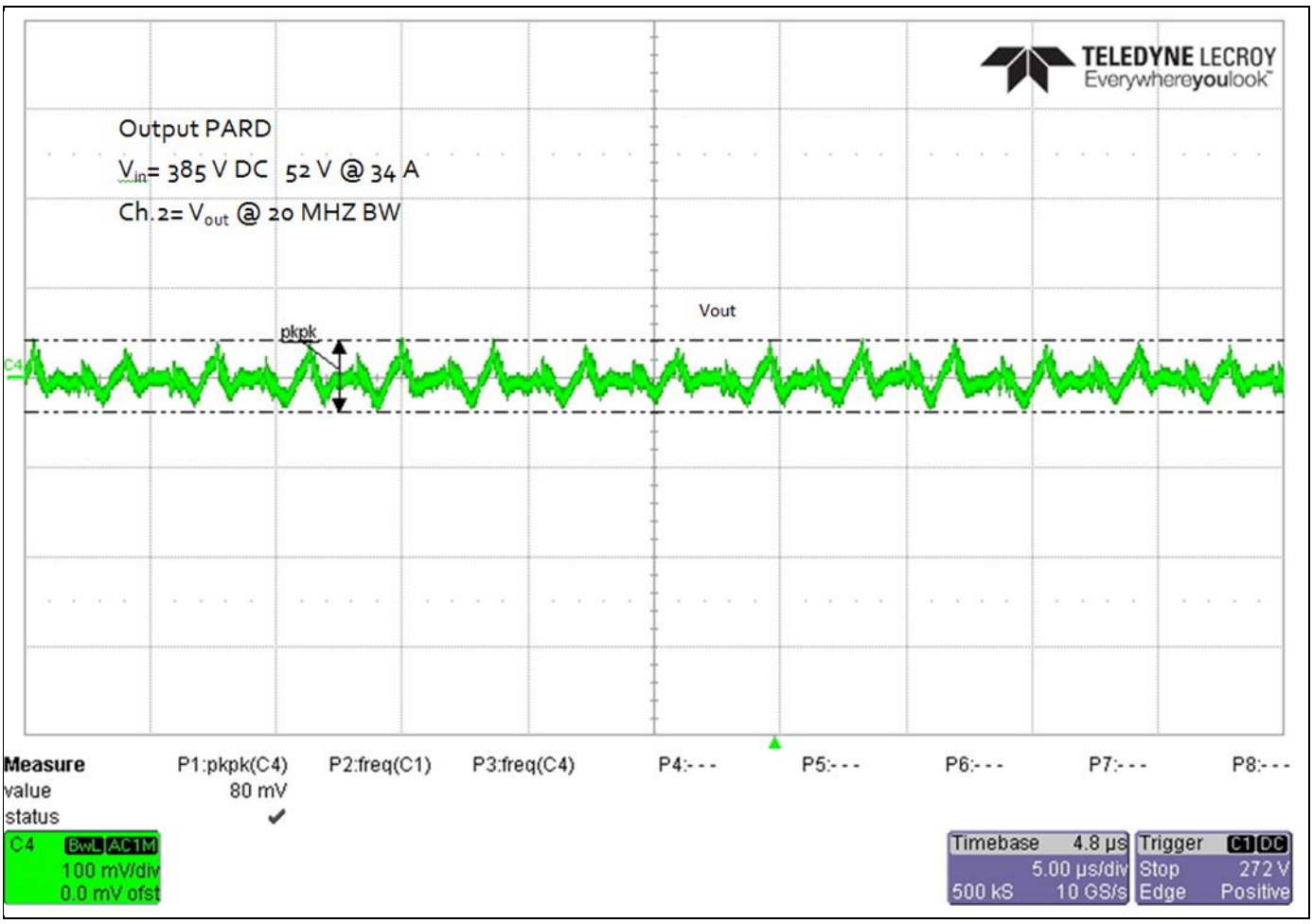

Figure 61 Output PARD at half load of 34 A

12.23 Output PARD at 100 percent load

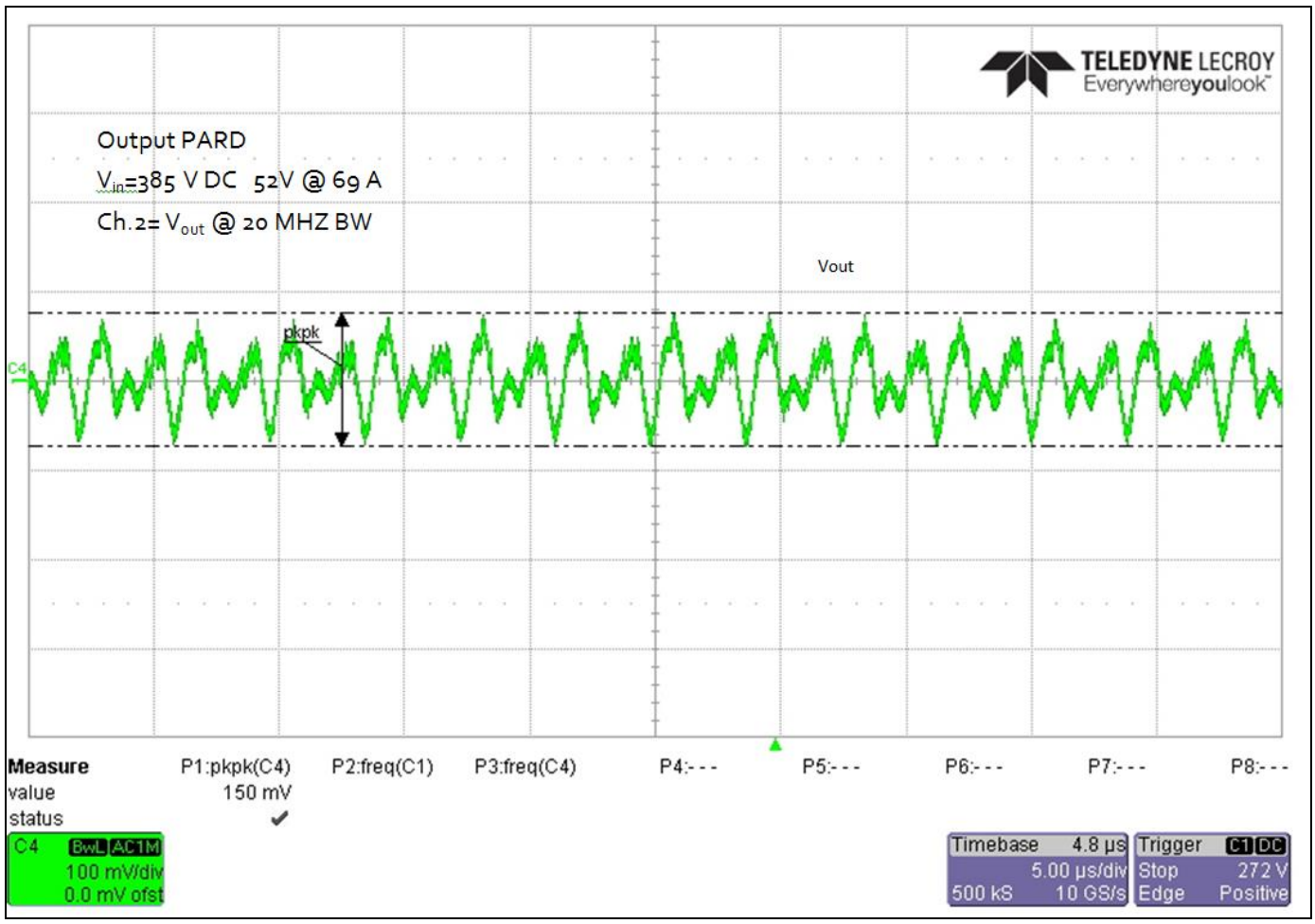

Figure 62 Output PARD at full load of 69 A

13 Bill of Materials (BOM)

13.1 Full-bridge main board bill of materials

Table 9 Full-bridge main board bill of materials

Reference designator	Value	Footprint	Part number
BRD1	PC Board (FAB)	Part Number	P100040 C
C1,C2,C3	82 uF	cap16p5x31p5mm	450CXW82MEFC16X31.5
C4,C54	3300 pF	C2220	GA355QR7GF332KW01L
C5,C6	0.047 uF	C1206	C3216X7R2E473K160AA
C8,C9,C10,C11,C12,C13,C14,C15,C16,C17,C18,C19,C20,C21,C22,C23,C24,C25,C26,C27,C28,C29,C30	10 uF	C1210	GRM32ER71J106MA12L
C31,C32,C33,C34	470 uF	cap12p5x25mm	UPW1J471MHD
C35,C36,C37,C38,C39,C40,C41,C42,C43,C44,C45,C46,C47,C48,C49,C50,C55	0.1 uF	c0805	C2012X7R1H104M085AA
C51	100 uF	cap8x11p5mm	UPW1H101MPD
C52	680 uF	cap8x11p5mm	UPW1C681MPD6
C53	100 pF	C0805	CGA4C2C0G2A101J060AA
C75	1000 pF,	C0805	C2012C0G2A102J060AA
J1	INPUT	3pinterminal	1729131
J11,J13, ,15,J16	FAN CONACTOR	CONN2POS100	640456-2
Q1,Q2,Q3,Q4,Q5,Q6,Q7,Q8,Q9,Q10,Q11,Q12,Q13,Q14,Q15,Q16	FET	PQFN5X6MM	BSC026N08NS5
R1,R2,R3,R4	750 k	R0805	RK73H2ATTD7503F
R5,R6,R7,R8,R9,R10,R11,R12,R13,R14,R15,R16,R17,R18,R19,R20,R25,R26	10 k	R0805	RK73H2ATTD1002F
R21,R22	0.0005	R2512	CSR2512C0R0005F
R24	0	R0805	RK73H2ATTD0000F
R27	5.11 K	R2512	ERJ-1TNF5111U
R28,R30	1 K	R0805	RK73H2ATTD1001F
R29,R32	200 K	R0805	RK73H2ATTD2003F
R49	10K NTC	R0805	NTCS0805E3103*LT
U1,U2,U3,U4,U5,U6,U7,U8	UCC27211	PowerPad-8	UCC27211DDAR
U10	OPA140A	sot23-5	OPA140AIDBVT
W1	WIRE	Jump_200	TXXL230/44T2XX-27"long

Reference designator	Value	Footprint	Part number
B1	FAN	FAN-40x28mm2	04028DA-12R-AU-F0
F1	15A / 500 Vdc	fuse-3ag	0505015MXEP
H1,H2	Heatsink	2400X400-2	H100001-2
J2	+48VOUT	jack1	CX70-14-CY
J7	RTN	jack1	CX70-14-CY
L1	LR	L-2p-1250x650	M100004
L2	LM	PQ26_25bobin	M100003
L3	MicroMetals	L-4P-500x300	C055381A2
P1	HB #1	slots_for_CoolGaN	HB_TOLL Board #1
P2	HB #2	slots_for_ CoolGaN	HB_TOLL Board #2
P3	Bias Bd	slots_for_Bias	LLC3KW_BIAS_SC
P4	LLC Control Bd	slots_for_cntl	LLC3KW_CONTROL
T1,T2	TN26/15/15	xfmr-6p-1250x800	M100007
Z1,Z2,Z3,Z4	Screw PHMS 4-40 x 1/4		PMS 440 0025 PH
Z5,Z6	Screw PHMS 8-32 x 3/8		91241A652
Z7,Z8,Z9,Z10	Standoff Hex 4-40 x 1/2		2203
Z11,Z12,Z13,Z14	Pem Nut Unthreaded		4855
Z15,Z16	Pem Nut 8-32		P-KF2-832-ET
Z17,Z18	CABLE TIE		PLT1M-M1
Z19	Connector 2 Pin (Fan)		3-641653-2
Z20	Nomex- Airflow Deflector		H100010
Z21	Label		½” LABEL 5418
Z22,Z23,Z24,Z25	Screw PHMS 4-40 x 1/2		PMS 440 0050 PH
Z26,Z27,Z28,Z29	Washer Flat Steel #4 x .280 OD min		4692
Z30,Z31	THERMAL PAD 1.75"X.50" .040"Thick		H10002/GPVOUS-0.040-00-0816
Z32	WIRE BUS 15 AWG		286
Z33	WIRE 26 AWG RED UL11028		6711 RD005
Z34	WIRE 26 AWG BLK UL11028		6711 BK005
TP1,TP2,TP3,TP4,TP5,TP6	Smd Loop	TP-SmLoop_SMD	S2761-46R

13.2 52 V control board bill of materials

Table 10 52 V control board bill of materials

Reference designator	Value	Footprint	Part number
BRD1	PC Board (FAB)	Part Number	P100006 C
C1	4.7 uF	C0805	C2012X7R1C475M
C2,C3,C4,C7,C14,C18,C19,C20, C21,C22,C34,C37	0.1 uF	C0603	C1608X7R1H104K080AA
C5,C6	1 uF	C0603	C1608X7R1C105KT
C8,C9,C10,C11,C35	1000 pF	C0603	C1608C0G1H102F080AA
C12	0.015 uF	C0603	C1608X7R2A153K080AA
C13,C15,C24	0.047 uF	C0603	C1608X7R1H473M080AA
C16,C17	100 pF	C0603	C1608C0G1H101J080AA
C23	10 uF	C1206	C3216X7R1C106M160AE
C25,C31,C32	470 pF	C0603	CGA3E2C0G2A471J080AA
C26	0.022 uF	C0603	C1608X8R1H223K080AA
C27,C28,C29,C30	0.01 uF	C0603	C1608X7R1H103K080AA
C33,C36	1 uF	C0805	C2012X7R1H105K085AC
D1,D2	MMBD4448	SOT23	MMBD4448
D3,D4	GREEN	SOT23	AM23SGD3-F
D7	100 ma	SOT23	MMBD2838LT1G
D8	BAT54	SOT23	BAT54FSCT-ND
Q3,Q4,Q5,Q6,Q7,Q9,Q10,Q11	2N7002E	SOT23	2N7002E
R4,R7,R72,R80,R81	1 K	R0603	ERA-3AEB102V
R5,R68,R70	100 K	R0603	RK73H1JTTD1003F
R6	432 K	R0603	RK73H1JTTD4323F
R8,R9,R10,R11,R12,R13,R14, R15,R18,R27,R28,R51,R71	10 K	R0603	ERA-3AEB103V
R16,R60	100	R0603	RK73H1JTTD1000F
R17	221	R0805	RK73H2ATTD2210F
R19	1.1 K	R0603	RK73H1JTTD1101F
R20	22.1 K	R0805	RK73H1JTTD2212F
R21	4.32 K	R0603	RK73H1JTTD4321F
R22	82.5 K	R0603	RK73H1JTTD8252F
R23	61.9 K	R0603	RK73H1JTTD6192F
R24	66.5 K	R0603	RK73H1JTTD6652F
R29,R32,R33,R93	2 k	R0603	RK73H1JTTD2001F
R30,R43	5.11 K	R0603	RK73H1JTTD5111F
R31	619	R0603	RK73H1JTTD6190F
R34	162 k	R0603	RK73H1JTTD1623F

Reference designator	Value	Footprint	Part number
R35,R36,R37,R38,R84	1 M	R0603	RK73H1JTTD1004F
R39	2 M	R0603	RK73H1JTTD2004F
R40	7.87 K	R0603	RK73H1JTTD7871F
R41,R42	5.62 K	R0603	RK73H1JTTD5621F
R44	1.3 K	R0603	RK73H1JTTD1301F
R45,R58,R59,R63	3.32 k	R0603	RK73H1JTTD3321F
R46	9.09 K	R0603	RK73H1JTTD9091F
R47,R48	0	R0805	ERJ-6GEY0R00V
R49,R50	249	R0805	ERJ-6ENF2490V
R53,R92	16.2 K	R0603	RK73H1JTTD1622F
R54,R55	4.75 K	R0603	RK73H1JTTD4751F
R56,R57	2.87 K	R0603	RK73H1JTTD2871F
R61	511	R0603	RK73H1JTTD5110F
R62	10	R0805	ERJ-6ENF10R0V
R64	2.21 K	R0805	RK73H2ATTD2211F
R65,R76	4.02 k	R0603	RK73H1JTTD4021F
R66,R74	40.2 K	R0603	RK73H1JTTD4022F
R73,R91	43.2 K	R0603	RK73H1JTTD4322F
R69	210 K	R0603	RK73H1JTTD2103F
R75,R79	11 K	R0603	RK73H1JTTD1102F
R77,R78	6.81 K	R0805	RK73H2ATTD6811F
R82,R83,R87,R88	0	R0603	ERJ-3GEY0R00V
R86	2.21 k	R0603	RK73H1JTTD2211F
R89,R90	5.11	R0603	RC0603FR-075R11L
R95	200	R0603	ERA-3AEB201V
U1	ICE2HS01G	PG-DSO-20-45	ICE2HS01GXUMA1
U2	ACPL-K73L	opto-SO8	ACPL-K73L-060E
U3	LM393	SOIC8	LM393DR
U4,U5	PS2561L-1A	opto-_PS2561	PS2561L-1-A
U6	LM358	SOIC8	LM358ADR
U7	LM339	SOIC14	LM339ADR
U8	RED	SOT23	AM23SRD-F
VR1,VR2	TL431	SOT23	TL431AFDT,215
Z1	5.6 V	SOT23	MMBZX84C5V6
Z2,Z3	5.1 V	SOT23	MMBZ5231BLT1G
Z4	33 V	SOT23	MMBZ5257BLT1G
Z5	10 V	SOT23	BZX84B10-7-F
Q1,Q2,D5,D6	NU	SOT23	Not Used
R1,R2,R3,R25,R26,R52	NU	R0603	Not Used

Reference designator	Value	Footprint	Part number
R94	NU	pot-3314J	Not Used
R67	47.5 K	R0603	ERA-3AEB4752V

13.3 CoolGaN™ half-bridge board 1 bill of materials

Table 11 CoolGaNTM half-bridge board 1 bill of materials

Reference designator	Value	Footprint	Part number
BRD1	PC Board (FAB)	Part Number	P100015 B
C1,C2,C7,C8,C9,C10,C17,C18,C30	1 uF	C0805	C2012X7R1C105K125AA
C3,C4,C5,C6	0.1 uF	C0805	C2012X7R1H104K085AA
C11,C12,C13,C14	0.01 uF	C0805	C2012C0G2A103K125AA
C28	0.01 uF	C0805	C2012C0G2A103K125AA
C15,C16	0.033 uF	C1206	C3216X7R2J333M160AA
C26	1000 pF	C0805	C2012C0G2A102J060AA
C27	470 pF	C0805	C2012C0G1H471J
C31,C32	470 pF	C0603	C1608C0G1H471J
D1,D2	C3D1P7060Q	QFN3p3	C3D1P706Q
D3,D4,D5,D6	2 A	SMA-DIODE	MURA220T3G
D7,D8,D9	2 A	SMA-DIODE	MURA220T3G
Q1,Q2,Q3,Q4	IGT60R070D1	PG-TOLL	IGT60R070D1
R1,R2,R3,R4,R5,R6,R8,R9	10 K	R0603	ERJ-PA3F1002V
R7	10K NTC	R0805	NTCS0805E3103*LT
R10,R11,R12,R13	20	R0805	ERJ-6ENF20R0V
R14,R15,R16,R17,R18,R19,R20,R21	4.7	R0805	ERJ-6RQF4R7V
R22,R23,R24,R25	1 k	R0805	ERJ-6ENF1001V
R26	100	R0805	RK73H2ATTD1000F
R27	2	R1206	RK73H2BTTD2R00F
R28	18.2	R1206	RC1206FR-0718R2L
R29	1	R1206	RK73H2BTTD1R00F
R30,R31	100	R0603	RK73H1JTTD1000F
R32	3	R0603	ERJ6GEYJ3R0V
U1,U2,U3,U4	1EDI20N12AF	pg-dso-8-51	1EDI20N12AF
H1,H2,H3,H4	HS Clip	HEATSINK500X400	H100008
T1	XFMR Toroid	Xfmr_Tor_CS_450OD	M100006
C19,C20,C21,C22,C23,C24,C25,C29	NU	C1210	Not Used

13.4 CoolGaN™ half-bridge board 2 bill of materials

Table 12

Reference designator	Value	Footprint	Part number
BRD1	PC board (FAB)	Part number	P100015 B
C1,C2,C7,C8,C9,C10,C17,C18,C30	1 uF	C0805	C2012X7R1C105K125AA
C3,C4,C5,C6	0.1 uF	C0805	C2012X7R1H104K085AA
C11,C12,C13,C14	0.01 uF	C0805	C2012C0G2A103K125AA
C15,C16	0.033 uF	C1206	C3216X7R2J333M160AA
C19,C20,C21,C22,C23,C24,C25,C29	4700 pF	C1210	C3225COG2J472J160AA
C26	1000 pF	C0805	C2012C0G2A102J060AA
C31,C32	470 pF	C0603	C1608C0G1H471J
D1,D2	C3D1P7060Q	QFN3p3	C3D1P706Q
D7,D8,D9	2 A	SMA-DIODE	MURA220T3G
Q1,Q2,Q3,Q4	IGT60R070D1	PG-TOLL	IGT60R070D1
R1,R2,R3,R4,R5,R6,R8,R9	10 K	R0603	ERJ-PA3F1002V
R7	10K NTC	R0805	NTCS0805E3103*LT
R10,R11,R12,R13	20	R0805	ERJ-6ENF20R0V
R14,R15,R16,R17,R18,R19,R20,R21	4.7	R0805	ERJ-6RQF4R7V
R22,R23,R24,R25	1 k	R0805	ERJ-6ENF1001V
R30,R31	100	R0603	RK73H1JTTD1000F
R32	3	R0603	ERJ6GEYJ3R0V
U1,U2,U3,U4	1EDI20N12AF	pg-dso-8-51	1EDI20N12AF
H1,H2,H3,H4	HS Clip	HEATSINK500X400	H100008
C27	NU	C0805	Not Used
C28	NU	C0805	Not Used
D3,D4,D5,D6	NU	SMA-DIODE	Not Used
T1	NU	Xfmr_Tor_CS_450OD	Not Used
R26	NU	R0805	Not Used
R27	NU	R1206	Not Used
R28	NU	R1206	Not Used
R29	NU	R1206	Not Used

13.5 Bias board bill of materials

Table 13 Bias board bill of materials

Reference designator	Value	Footprint	Part number
BRD1	PC Board (FAB)	PartNumber	P100045 B
C1,C3	10 uF	C1206	C3216X7R1C106M160AC
C2	4700 pF	C0805	C2012C0G2A472K125AA
C4	47 pF	C0603	C1608C0G2A470J080AA
C5	1000 pF	C0805	C0805C102K5RACTU
C6,C7	0.022 uF	C1206	C3216X7R2J223M130AA
C8	2.2 uF	C1206	C3216X7R1E225K160AA
C10	47 pF	C1206	C1206C470KDGACTU
C11,C12,C18,C19,C20	22 uF	C1210	C3225X7R1C226K250AC
C13,C14	0.1 uF	C1812	C4532X7R2J104K230KA
C16	470 pF	C0805	C2012C0G2W471K060AA
C17	0.22 uF	C0805	C2012X7R1H224K125AA
C21	1 uF	C1206	C3216X7R1H105K160AB
D1	MURA220T3G	sma-diode	MURA220T3G
D3	MBRS3100T3G	SMC-diode	MBRS3100T3G
D5	MMBD4448	SOT23	MMBD4448
D6,D7	US1M-13-F	sma-diode	US1M-13-F
R1	3.92 k	R0805	RK73H2ATTD3921F
R2	15 k	R0805	RK73H2ATTD1502F
R3,R4	61.9 k	R1210	RK73H2ETTD6192F
R5	0	R0805	ERJ-6GEY0R00V
R7	3	R1206	RK73H2BTTD3R01F
R8	1	R1206	RK73H2BTTD1R00F
R9	1 k	R1210	RK73H1JTTD1001F
R10	200 k	R1206	RK73H2BTTD2003F
R11	1 k	R0805	RK73H2ATTD1001F
R12	2 k	R0805	RK73H2ATTD2001F
R13	5.11 K	R0805	RK73H2ATTD5111F
R14	1.5 K	R0805	RK73H2ATTD1501F
R15	9.53 K	R0805	ERJ-6AEB9531V
R16	100	R0805	RK73H2ATTD1000F
R17	2.67 K	R0805	ERA-6AEB2671V
U1	ICE2QR2280Z-1	dip8-pin5	ICE2QR2280Z-1
U2	TL431	SOT23	TL431AQDBZR
U5	PS2561L-1A	opto-_PS2561	PS2561L-1-A
Z2	22 V	SOT23	BZX84C22LT1G

Reference designator	Value	Footprint	Part number
T1	M100005	EFD25_13_9	M100005
C9	N/U	C0805	Not Used
C15	N/U	C1812	Not Used

Revision history

Major changes since the last revision

Page or reference	Description of change
09/21/2018	Update thermal images on p45-p47.

Trademarks
All referenced product or service names and trademarks are the property of their respective owners.

Published by

Infineon Technologies AG

81726 Munich, Germany

© 2020 Infineon Technologies AG. All Rights Reserved.

Do you have a question about this document?

Email: erratum@infineon.com

Document reference

IMPORTANT NOTICE

The information contained in this application note is given as a hint for the implementation of the product only and shall in no event be regarded as a description or warranty of a certain functionality, condition or quality of the product. Before implementation of the product, the recipient of this application note must verify any function and other technical information given herein in the real application. Infineon Technologies hereby disclaims any and all warranties and liabilities of any kind (including without limitation warranties of non-infringement of intellectual property rights of any third party) with respect to any and all information given in this application note.

The data contained in this document is exclusively intended for technically trained staff. It is the responsibility of customer's technical departments to evaluate the suitability of the product for the intended application and the completeness of the product information given in this document with respect to such application.

For further information on the product, technology delivery terms and conditions and prices please contact your nearest Infineon Technologies office (**www.infineon.com**).

WARNINGS

Due to technical requirements products may contain dangerous substances. For information on the types in question please contact your nearest Infineon Technologies office.

Except as otherwise explicitly approved by Infineon Technologies in a written document signed by authorized representatives of Infineon Technologies, Infineon Technologies' products may not be used in any applications where a failure of the product or any consequences of the use thereof can reasonably be expected to result in personal injury.